TCA6507 Low-Voltage 7-Bit I²C and SMBus LED Driver With Intensity Control and Shutdown

1 Features

- Seven LED Driver Outputs: ON, OFF, Blinking, Fading at Programmable Rates
- Open-Drain Outputs Directly Drive LEDs to 40-mA Maximum
- Two Independent Banks of LED Drivers
- Widely Programmable Blink Rates, Fade-ON and Fade-OFF Rates and Maximum Intensity
- Outputs Not Used as LED Drivers Can Be Used as Regular General-Purpose Open-Drain Outputs
- 16 Steps of Maximum Intensity Control from Fully-OFF to Fully-ON States
- Smooth Perceived Transitions for Fade-ON and Fade-OFF
- Operating Power-Supply Voltage Range of 1.65 V to 3.6 V
- 5.5-V Tolerant Open-Drain Outputs
- Low Standby Current With Shutdown Capability for Additional Power Savings
- Programmed Through I²C Bus Interface Logic Compatible With SMBus
- No Glitch on Power Up
- ESD Protection Exceeds JESD 22
  - 2000-V Human-Body Model (A114-A)
  - 200-V Machine Model (A115-A)
  - 1000-V Charged-Device Model (C101)
- Latch-Up Performance Exceeds 100 mA Per JESD 78, Class II

2 Applications

- Mobile Phones
- Desktop and Laptop Computers
- Human Machine Interface

3 Description

This 7-bit LED dimmer for the two-line bidirectional bus (I²C) is designed to control (or dim) LEDs through the I²C interface. Without this device, the microcontroller must be actively involved in turning on and off the LEDs (per the required dimming rate), which uses valuable processor time. The TCA6507 alleviates this issue by limiting the number of operations required by the processor in blinking LEDs and helps to create a more efficient system. The TCA6507 handles all pulse width modulation (PWM) logic, allowing the processor to use its cycles for more important tasks.

Device Information(1)

PART NUMBER	PACKAGE	BODY SIZE (NOM)
TCA6507	TSSOP (14)	5.00 mm × 4.40 mm
	BGA MICROSTAR JUNIOR (12)	2.00 mm × 2.50 mm
	X2QFN (12)	2.00 mm × 1.40 mm

(1) For all available packages, see the orderable addendum at the end of the data sheet.

Simplified Schematic

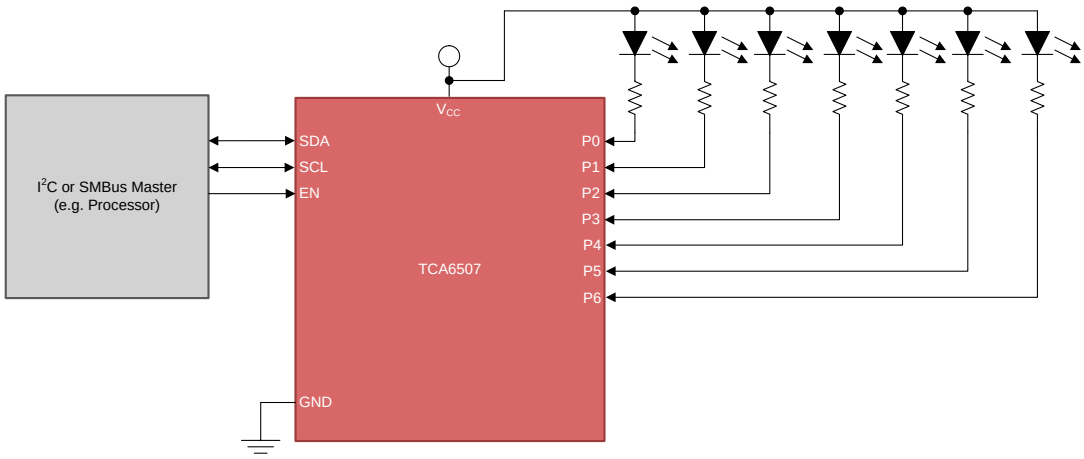

Copyright © 2017, Texas Instruments Incorporated

An IMPORTANT NOTICE at the end of this data sheet addresses availability, warranty, changes, use in safety-critical applications, intellectual property matters and other important disclaimers. PRODUCTION DATA.

Table of Contents

1 Features ... 1
2 Applications ... 1
3 Description ... 1
4 Revision History ... 2
5 Pin Configuration and Functions ... 3
6 Specifications ... 5
6.1 Absolute Maximum Ratings ... 5
6.2 ESD Ratings ... 5
6.3 Recommended Operating Conditions ... 5
6.4 Thermal Information ... 6
6.5 Electrical Characteristics ... 6
6.6 I^2C Interface Timing Requirements ... 7
6.7 Oscillator Timing Requirements ... 8
6.8 Switching Characteristics ... 8
6.9 Typical Characteristics ... 9
7 Parameter Measurement Information ... 11
8 Detailed Description ... 13
8.1 Overview ... 13
8.2 Functional Block Diagram ... 14
8.3 Feature Description ... 15
8.4 Device Functional Modes ... 15
8.5 Programming ... 16
8.6 Register Maps ... 23
9 Application and Implementation ... 30
9.1 Application Information ... 30
9.2 Typical Application ... 30
9.3 System Example ... 33
10 Power Supply Recommendations ... 34
10.1 Power-On Reset Requirements ... 34
11 Layout ... 35
11.1 Layout Guidelines ... 35
11.2 Layout Example ... 35
12 Device and Documentation Support ... 36
12.1 Documentation Support ... 36
12.2 Receiving Notification of Documentation Updates 36
12.3 Community Resources ... 36
12.4 Trademarks ... 36
12.5 Electrostatic Discharge Caution ... 36
12.6 Glossary ... 36
13 Mechanical, Packaging, and Orderable Information ... 36

4 Revision History

NOTE: Page numbers for previous revisions may differ from page numbers in the current version.

Changes from Revision C (January 2016) to Revision D	Page
• Changed f_{INT} value From: MIN = 23 and MAX = 43 To: MIN = 28 and MAX = 58 in the *Electrical Characteristics* table	6
• Changed V_{POR} values From: TYP = 1.4 To: TYP = 1.1 MAX = 1.4 in the *Electrical Characteristics* table	6
• Changed Operating I_{CC} MAX value From: 25 To: 40 in the *Electrical Characteristics* table	6
• Changed C_i, C_{io}, C_o TYP and MAX values in the *Electrical Characteristics* table	6
• Changed The *I^2C Interface Timing Requirements* table	7
• Changed The*Oscillator Timing Requirements* table	8
• Changed The*Switching Characteristics* table	8
• Updated *Typical Characteristic* Curves	9
• Changed Table 18, Brightness Register Values	27
• Changed Table 26	34

Changes from Revision B (November 2007) to Revision C	Page
• Added *ESD Ratings* table, *Feature Description* section, *Device Functional Modes*, *Application and Implementation* section, *Power Supply Recommendations* section, *Layout* section, *Device and Documentation Support* section, and *Mechanical, Packaging, and Orderable Information* section	1

Copyright © 2007–2017, Texas Instruments Incorporated

5 Pin Configuration and Functions

PW Package
14-Pin TSSOP
Top View

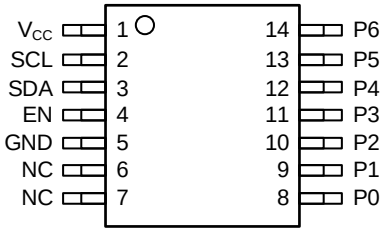

RUE Package
12-Pin X2QFN
Top View

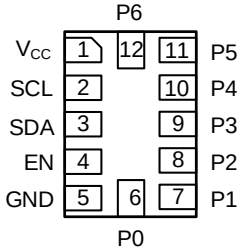

Pin Functions –TSSOP and X2QFN

PIN			I/O	DESCRIPTION
NAME	NO.			
	PW	RUE		
EN	4	4	I	Enable input. If set to low, it puts the TCA6507 in shutdown mode and resets the internal registers and I^2C/SMBus state machine to their default states
GND	5	5	—	Ground
P0	8	6	O	P-port output 0. Open-drain design structure
P1	9	7	O	P-port output 1. Open-drain design structure
P2	10	8	O	P-port output 2. Open-drain design structure
P3	11	9	O	P-port output 3. Open-drain design structure
P4	12	10	O	P-port output 4. Open-drain design structure
P5	13	11	O	P-port output 5. Open-drain design structure
P6	14	12	O	P-port output 6. Open-drain design structure
SDA	3	3	I/O	Serial data bus. Connect to V_{CC} through a pull-up resistor
SCL	2	2	I	Serial clock bus. Connect to V_{CC} through a pull-up resistor
V_{CC}	1	1	—	Supply voltage of I^2C registers, oscillator, and control logic. Connect directly to V_{CC} of the external I^2C master. Provides voltage-level translation

Copyright © 2007–2017, Texas Instruments Incorporated

ZXU Package
12-Pin BGA MICROSTAR JUNIOR
Top View

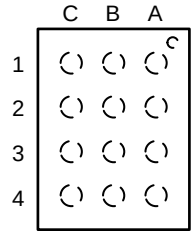

Table 1. ZXU Package Terminal Assignments

	C	B	A
1	P1	P2	GND
2	P3	EN	SDA
3	P4	P0	SCL
4	P5	P6	V_{CC}

Pin Functions –BGA Microstar Junior

PIN		I/O	DESCRIPTION
NO.	NAME		
A1	GND	—	Ground
A2	SDA	I/O	Serial data bus. Connect to V_{CC} through a pullup resistor
A3	SCL	I	Serial clock bus. Connect to V_{CC} through a pullup resistor
A4	V_{CC}	—	Supply voltage of I^2C registers, oscillator, and control logic. Connect directly to V_{CC} of the external I^2C master. Provides voltage-level translation
B1	P2	O	P-port output 2. Open-drain design structure
B2	EN	I	Enable input. If set to low, it puts the TCA6507 in shutdown mode and resets the internal registers and I^2C/SMBus state machine to their default states
B3	P0	O	P-port output 0. Open-drain design structure
B4	P6	O	P-port output 6. Open-drain design structure
C1	P1	O	P-port output 1. Open-drain design structure
C2	P3	O	P-port output 3. Open-drain design structure
C3	P4	O	P-port output 4. Open-drain design structure
C4	P5	O	P-port output 5. Open-drain design structure

Copyright © 2007–2017, Texas Instruments Incorporated

6 Specifications

6.1 Absolute Maximum Ratings

over operating free-air temperature range (unless otherwise noted)[1]

				MIN	MAX	UNIT
V_{CC}	Supply voltage			–0.5	4.6	V
V_I	Input voltage[2]			–0.5	6.5	V
V_O	Output voltage[2]				6.5	V
I_{IK}	Input clamp current	$V_I < 0$	SCL, EN		±20	mA
I_{OK}	Output clamp current	$V_O < 0$ or $V_O > V_{CC}$	P port, SDA		±20	mA
I_{OL}	Continuous output low current	$V_O = 0$ to V_{CC}	P port		50	mA
			SDA		25	
I_{CC}	Continuous current through GND				250	mA
	Continuous current through V_{CC}				20	
T_{stg}	Storage temperature			–65	150	°C

(1) Stresses beyond those listed under *Absolute Maximum Ratings* may cause permanent damage to the device. These are stress ratings only and functional operation of the device at these or any other conditions beyond those indicated under *Recommended Operating Conditions* is not implied. Exposure to absolute-maximum-rated conditions for extended periods may affect device reliability.
(2) The input negative-voltage and output voltage ratings may be exceeded if the input and output current ratings are observed.

6.2 ESD Ratings

			VALUE	UNIT
$V_{(ESD)}$	Electrostatic discharge	Human-body model (HBM), per ANSI/ESDA/JEDEC JS-001[1]	±2000	V
		Charged-device model (CDM), per JEDEC specification JESD22-C101[2]	±1000	

(1) JEDEC document JEP155 states that 500-V HBM allows safe manufacturing with a standard ESD control process.
(2) JEDEC document JEP157 states that 250-V CDM allows safe manufacturing with a standard ESD control process.

6.3 Recommended Operating Conditions

over operating free-air temperature range (unless otherwise noted)

				MIN	MAX	UNIT
V_{CC}	Supply voltage of I^2C registers, oscillator, and control logic			1.65	3.6	V
V_{IH}	High-level input voltage	SCL, SDA, EN	1.65 V ≤ V_{CC} ≤ 1.95 V	1.3	3.6	V
			1.96 V ≤ V_{CC} ≤ 3.6 V	0.7 × V_{CC}	3.6	
V_{IL}	Low-level input voltage	SCL, SDA, EN	1.65 V ≤ V_{CC} ≤ 1.95 V	–0.5	0.3	V
			1.96 V ≤ V_{CC} ≤ 3.6 V	–0.5	0.3 × V_{CC}	
V_O	Output voltage			0	5.5	V
I_{OL}	Low-level output current[1]				40	mA
T_A	Operating free-air temperature			–40	85	°C

(1) The total current sourced by the P port must be limited to 200 mA.

Copyright © 2007–2017, Texas Instruments Incorporated

6.4 Thermal Information

THERMAL METRIC[1]		TCA6507			UNIT
		PW (TSSOP)	ZXU (BGA MICROSTAR JUNIOR)	RUE (X2QFN)	
		14 PINS	12 PINS	12 PINS	
$R_{\theta JA}$	Junction-to-ambient thermal resistance	127.2	155.2	181	°C/W
$R_{\theta JC(top)}$	Junction-to-case (top) thermal resistance	55.8	99.4	80.4	°C/W
$R_{\theta JB}$	Junction-to-board thermal resistance	38.9	91.5	95.3	°C/W
ψ_{JT}	Junction-to-top characterization parameter	9.3	6.8	3.5	°C/W
ψ_{JB}	Junction-to-board characterization parameter	68.3	92.1	95.3	°C/W

(1) For more information about traditional and new thermal metrics, see the *Semiconductor and IC Package Thermal Metrics* application report.

6.5 Electrical Characteristics

GND = 0 V, T_A = –40°C to +85°C

PARAMETER		TEST CONDITIONS	V_{CC}	MIN	TYP[1]	MAX	UNIT
f_{INT}	Intensity control clock frequency	Operating mode	1.65 V to 3.6 V	28	32	58	kHz
V_{IK}	Input diode clamp voltage	I_I = –18 mA	1.65 V to 3.6 V	–1.2			V
V_{POR}	Power-on reset voltage	$V_I = V_{CC}$ or GND, I_O = 0	1.65 V to 3.6 V		1.1	1.4	V
V_{OL}	SDA	I_{OL} = 6 mA	1.65 V to 3.6 V		0.2	0.6	V
I_{OL}	SDA		1.65 V to 3.6 V	3	13.2		mA
	P port[2]	V_{OL} = 0.5 V	1.65 V	25	59.7		mA
		V_{OL} = 0.6 V	1.8 V to 3.6 V	40	68		
I_I	SCL, SDA, EN	$V_I = V_{CC}$ or GND, V_{CC} ≥ 1.65 V	1.65 V to 3.6 V			±0.1	µA
I_{CC}	Standby current	EN disabled, P port idle, Intensity control disabled, SCL = V_{CC}, SDA = V_{CC}, I_O = 0, f_{SCL} = 0	1.65 V to 1.95 V		2	12	µA
			1.96 V to 3.6 V		3	15	
	Operating mode	P port running, Intensity control enabled, SCL = V_{CC}, SDA = V_{CC}, I_O = 0, f_{SCL} = 0	1.65 V to 1.95 V		9.7	17	µA
			1.96 V to 3.6 V		10.4	20	
		P port running, Intensity control enabled, SDA = V_{CC}, I_O = 0, f_{SCL} = 400 kHz, t_r = 300 ns	1.65 V to 1.95 V		10.2	18	
			1.96 V to 3.6 V		11.4	40	
C_i	SCL		1.65 V to 3.6 V		7	10	pF
C_{io}	SDA	$V_{IO} = V_{CC}$ or GND	1.65 V to 3.6 V		8	11	pF
C_o	P port	$V_O = V_{CC}$ or GND	1.65 V to 3.6 V		7	10	pF

(1) All typical values are at T_A = 25°C.
(2) The total current sourced by the P port must be limited to 200 mA.

Copyright © 2007–2017, Texas Instruments Incorporated

6.6 I²C Interface Timing Requirements

over recommended operating free-air temperature range (unless otherwise noted) (see Figure 8)

			MIN	MAX	UNIT
STANDARD MODE					
f_{scl}	I²C clock frequency		0	100	kHz
t_{sch}	I²C clock high time		4		µs
t_{scl}	I²C clock low time		4.7		µs
t_{sp}	I²C spike time			50	ns
t_{sds}	I²C serial-data setup time		250		ns
t_{sdh}	I²C serial-data hold time		0		ns
t_{icr}	I²C input rise time			1000	ns
t_{icf}	I²C input fall time			300	ns
t_{ocf}	I²C output fall time	10-pF to 400-pF bus		300	ns
t_{buf}	I²C bus free time between STOP and START conditions		4.7		µs
t_{sts}	I²C START or repeated START condition setup		4.7		µs
t_{sth}	I²C START or repeated START condition hold		4		µs
t_{sps}	I²C STOP condition setup		4		µs
$t_{vd(data)}$	Valid-data time	SCL low to SDA output valid		1	µs
$t_{vd(ack)}$	Valid-data time of ACK condition	ACK signal from SCL low to SDA (out) low		1	µs
C_b	I²C bus capacitive load		0	400	pF
FAST MODE					
f_{scl}	I²C clock frequency		0	400	kHz
t_{sch}	I²C clock high time		0.6		µs
t_{scl}	I²C clock low time		1.3		µs
t_{sp}	I²C spike time			50	ns
t_{sds}	I²C serial-data setup time		100		ns
t_{sdh}	I²C serial-data hold time		0		ns
t_{icr}	I²C input rise time		20	300	ns
t_{icf}	I²C input fall time		20 × (V_{CC} / 5.5 V)	300	ns
t_{ocf}	I²C output fall time	10-pF to 400-pF bus	20 × (V_{CC} / 5.5 V)	300	ns
t_{buf}	I²C bus free time between STOP and START conditions		1.3		µs
t_{sts}	I²C START or repeated START condition setup		0.6		µs
t_{sth}	I²C START or repeated START condition hold		0.6		µs
t_{sps}	I²C STOP condition setup		0.6		µs
$t_{vd(data)}$	Valid-data time	SCL low to SDA output valid		1	µs
$t_{vd(ack)}$	Valid-data time of ACK condition	ACK signal from SCL low to SDA (out) low		1	µs
C_b	I²C bus capacitive load		0	400	pF

Copyright © 2007–2017, Texas Instruments Incorporated

6.7 Oscillator Timing Requirements

over recommended operating free-air temperature range (unless otherwise noted)

		MIN	MAX	UNIT
STANDARD and FAST MODE				
t_{OSC}	Oscillator start-up time from power-down or shutdown mode to fully on at 32 kHz	5		ms

6.8 Switching Characteristics

over recommended operating free-air temperature range, C_L ≤ 100 pF (unless otherwise noted)

PARAMETER		FROM (INPUT)	TO (OUTPUT)	MIN	MAX	UNIT
STANDARD and FAST MODE						
t_{pv}	Output data valid (in general-purpose output mode)	SCL	P port		400	ns
t_{ps}	Shutdown data valid	EN (low)	P port (high)		70	µs
t_w	EN pulse duration			60		µs

Copyright © 2007–2017, Texas Instruments Incorporated

6.9 Typical Characteristics

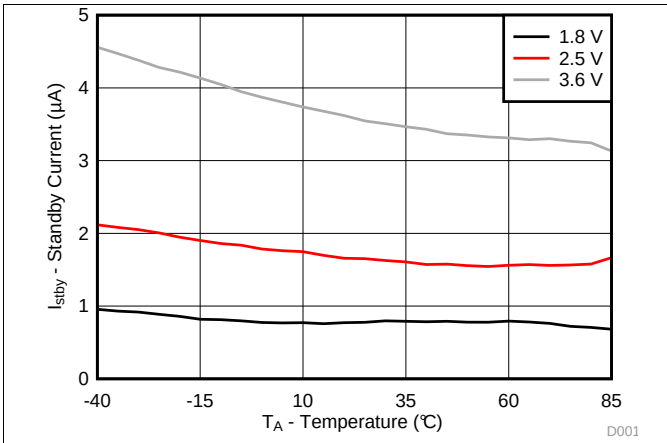

EN is Low (PWM Disabled) f_{SCL} = 0

Figure 1. Standby Current vs Temperature

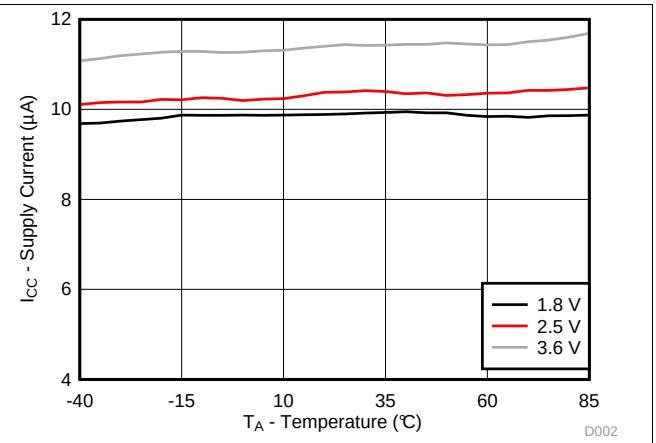

EN is Low (PWM Enabled) f_{SCL} = 0

Figure 2. Supply Current vs Temperature

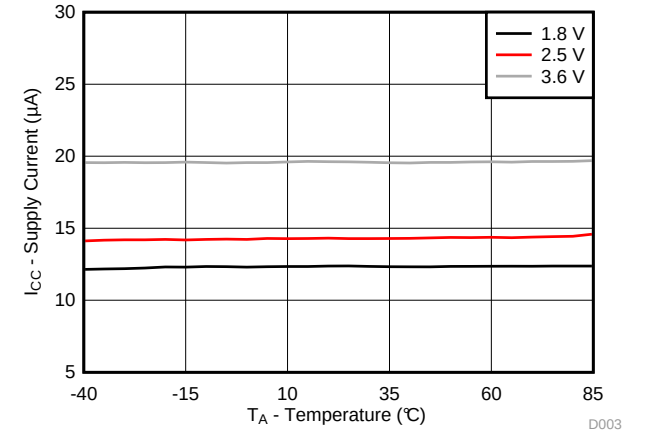

EN is High (PWM Enabled) f_{SCL} = 400 kHz

Figure 3. Supply Current vs Temperature

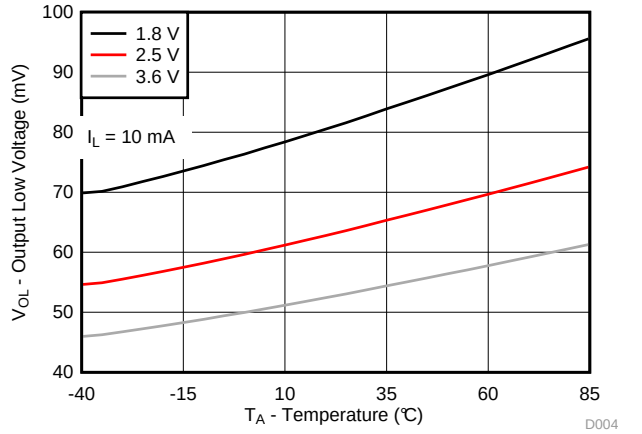

Figure 4. Port Output Low Voltage vs Temperature

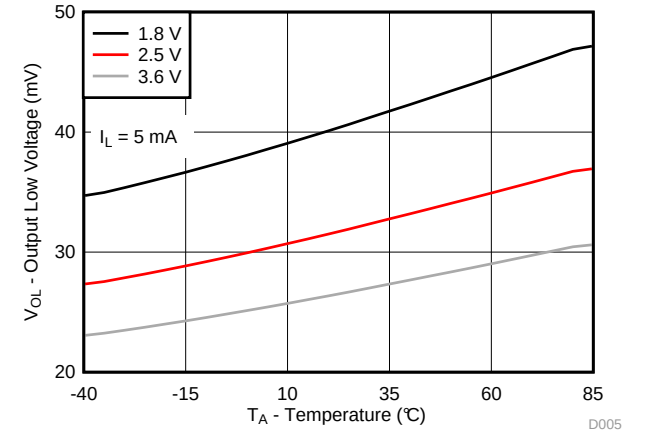

Figure 5. Port Output Low Voltage vs Temperature

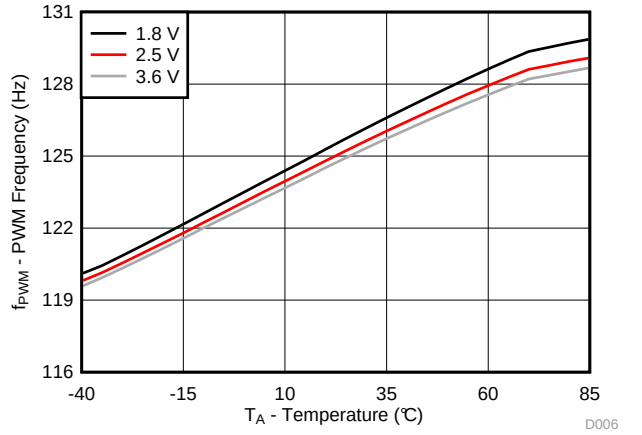

Figure 6. PWM Frequency vs Temperature

Typical Characteristics (continued)

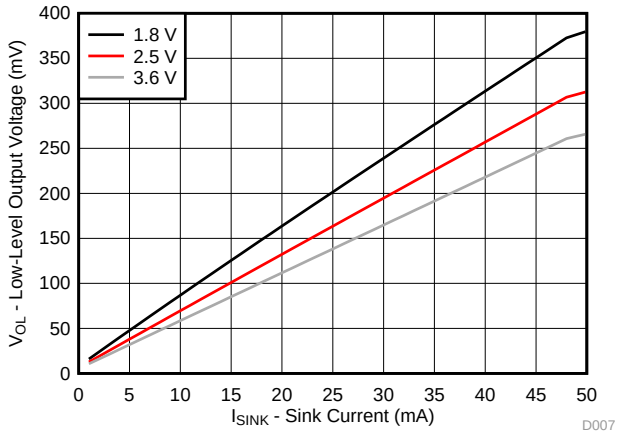

Figure 7. Output Low Voltage vs Sink Current

Copyright © 2007–2017, Texas Instruments Incorporated

7 Parameter Measurement Information

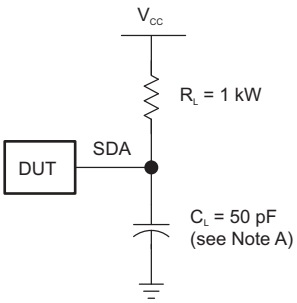

SDA LOAD CONFIGURATION

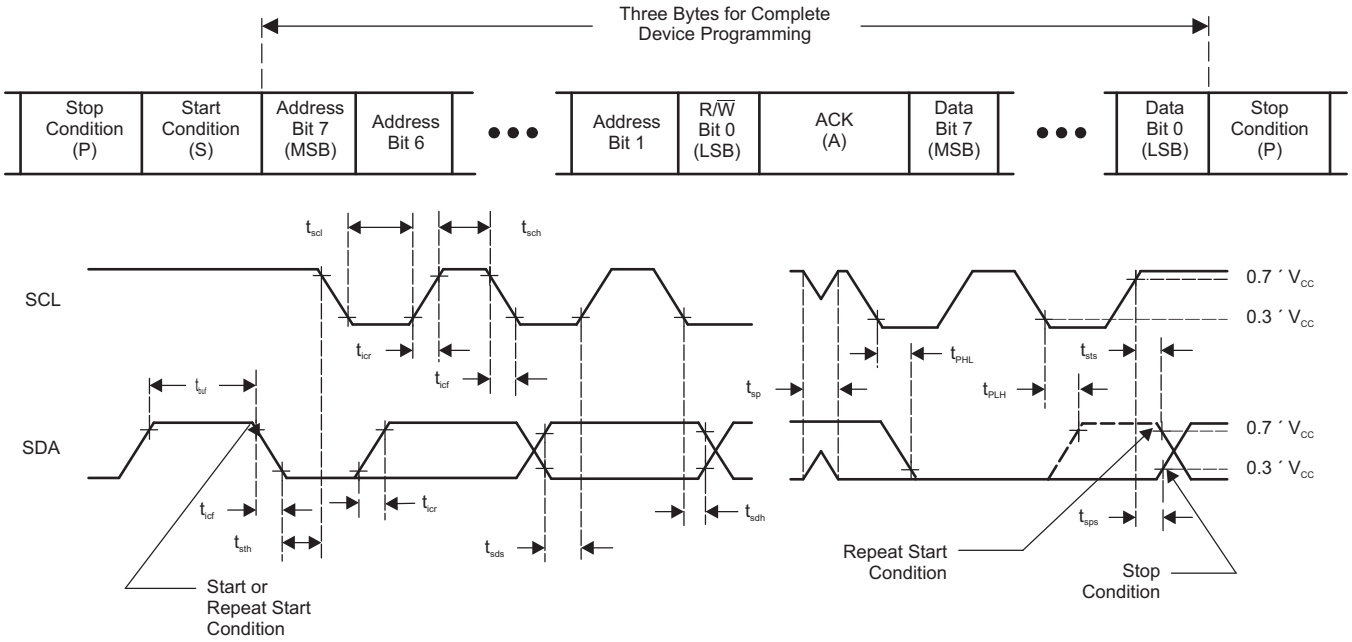

VOLTAGE WAVEFORMS

BYTE	DESCRIPTION
1	I^2C address
2	Command
3	P-port data

Copyright © 2017, Texas Instruments Incorporated

A. C_L includes probe and jig capacitance.

B. All inputs are supplied by generators having the following characteristics: PRR ≤ 10 MHz, Z_O = 50 Ω, t_r/t_f ≤ 30 ns.

C. All parameters and waveforms are not applicable to all devices.

Figure 8. I^2C Interface Load Circuit and Voltage Waveforms

Parameter Measurement Information (continued)

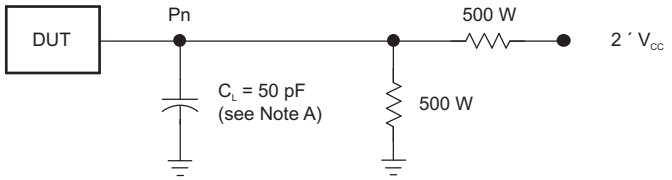

P-PORT LOAD CONFIGURATION

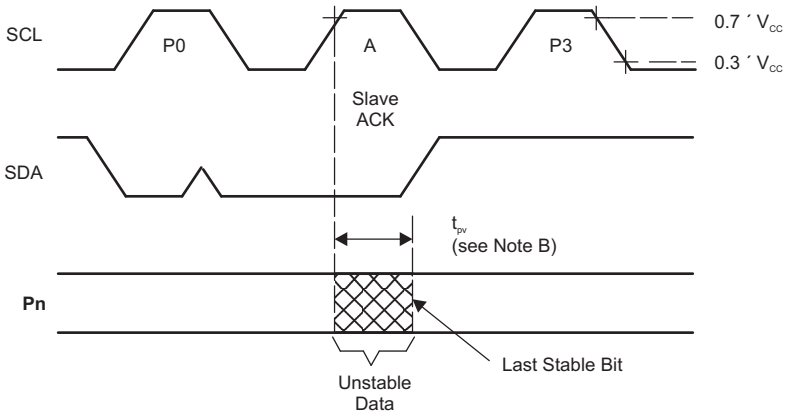

WRITE MODE (R/$\overline{W}$ = 0)

Copyright © 2017, Texas Instruments Incorporated

A. C_L includes probe and jig capacitance.
B. All inputs are supplied by generators having the following characteristics: PRR ≤ 10 MHz, Z_O = 50 Ω, t_r/t_f ≤ 30 ns.
C. The outputs are measured one at a time, with one transition per measurement.
D. All parameters and waveforms are not applicable to all devices.

Figure 9. P-Port Load Circuit and Voltage Waveforms

Copyright © 2007–2017, Texas Instruments Incorporated

8 Detailed Description

8.1 Overview

The TCA6507 can be used for driving LEDs and for general-purpose parallel output expansion. The TCA6507 has three select registers (Select0, Select1, and Select2), which can be used to configure each LED output into one of seven different operating modes. At power on, the outputs are in high impedance.

When used to drive LEDs, the seven outputs can be configured into two banks of outputs (BANK0 and BANK1). Each bank of outputs can be independently controlled for dimming rate and intensity through the I^2C bus. The dimming and blink rates are fully programmable. The intensity of each bank of LEDs is controlled by dynamically varying the duty cycle of the signal, which has a period of approximately 8 ms and a pulse rate of 125 times per second, driving the outputs. The TCA6507 has two independent dimming-blinking modules—PWM0 and PWM1—driven by a single internal oscillator that supports these features. PWM0 determines the characteristics of BANK0, and PWM1 determines the characteristics of BANK1.

The TCA6507 has a master intensity level known as the ambient light detection (ALD) value. The associated pulse width modulation (PWM) signal for this value is PWMALD. The TCA6507 can be programmed such that PWMALD overrides PWM0 or PWM1, so selected LEDs are on steadily at the master intensity level. Further, the TCA6507 can be programmed such that the ALD value can override the maximum intensity values for PWM0 and PWM1. Thus, the ALD value can control the brightness of all LEDs, whether they are on steadily, or controlled by one of the dimming modules. The ALD value is stored in the lower four bits of the One-Shot / Master Intensity register.

When the I^2C bus is idle, and intensity control is not used, the TCA6507 can be put into shutdown mode by setting the enable (EN) pin low. This mode provides additional power savings, as it is a low-power mode where the LEDs are off. A low signal on the EN pin also resets the registers and I^2C/SMBus state machine in the TCA6507 to their default state.

An initial setup command must be sent from the I^2C master to the TCA6507 to program the dimming rate and intensity (and intensity ramp if needed) for each bank of outputs. From then on, only one command from the bus master is required to turn each individual output ON, OFF, or to cycle at the programmed dimming rate. The default value for all time parameters is 256 ms, so the default blink rate is approximately one per second.

The TCA6507 is optimized for 1.65 V to 3.6 V on the SDA/SCL side, but the LEDs can be driven by any voltage up to 5.5 V. This allows the TCA6507 to interface with next-generation microprocessors and microcontrollers, where supply levels are dropping down to conserve power.

This LED dimmer supports hot insertion.

Copyright © 2007–2017, Texas Instruments Incorporated

8.2 Functional Block Diagram

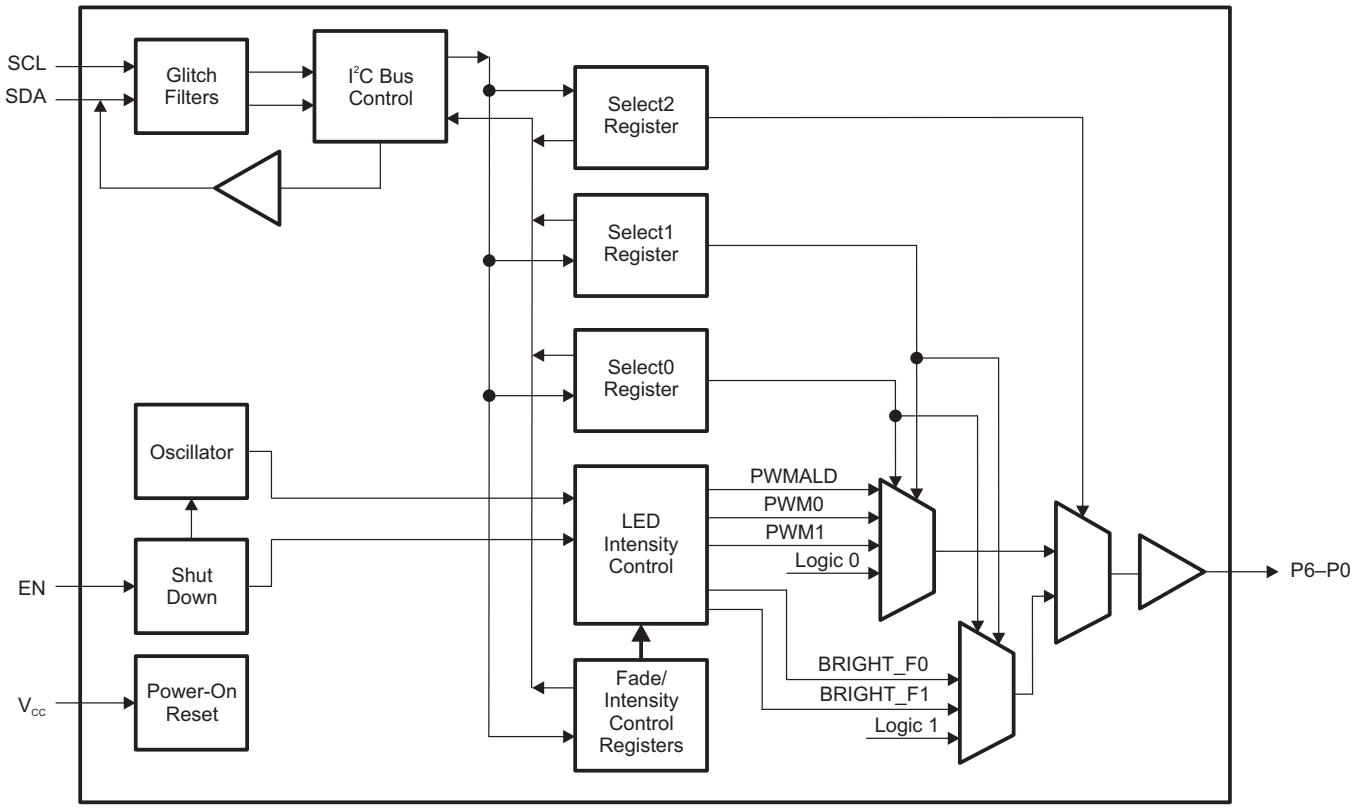

Copyright © 2017, Texas Instruments Incorporated

Figure 10. TCA6507 Functional Block Diagram

Copyright © 2007–2017, Texas Instruments Incorporated

Functional Block Diagram (continued)

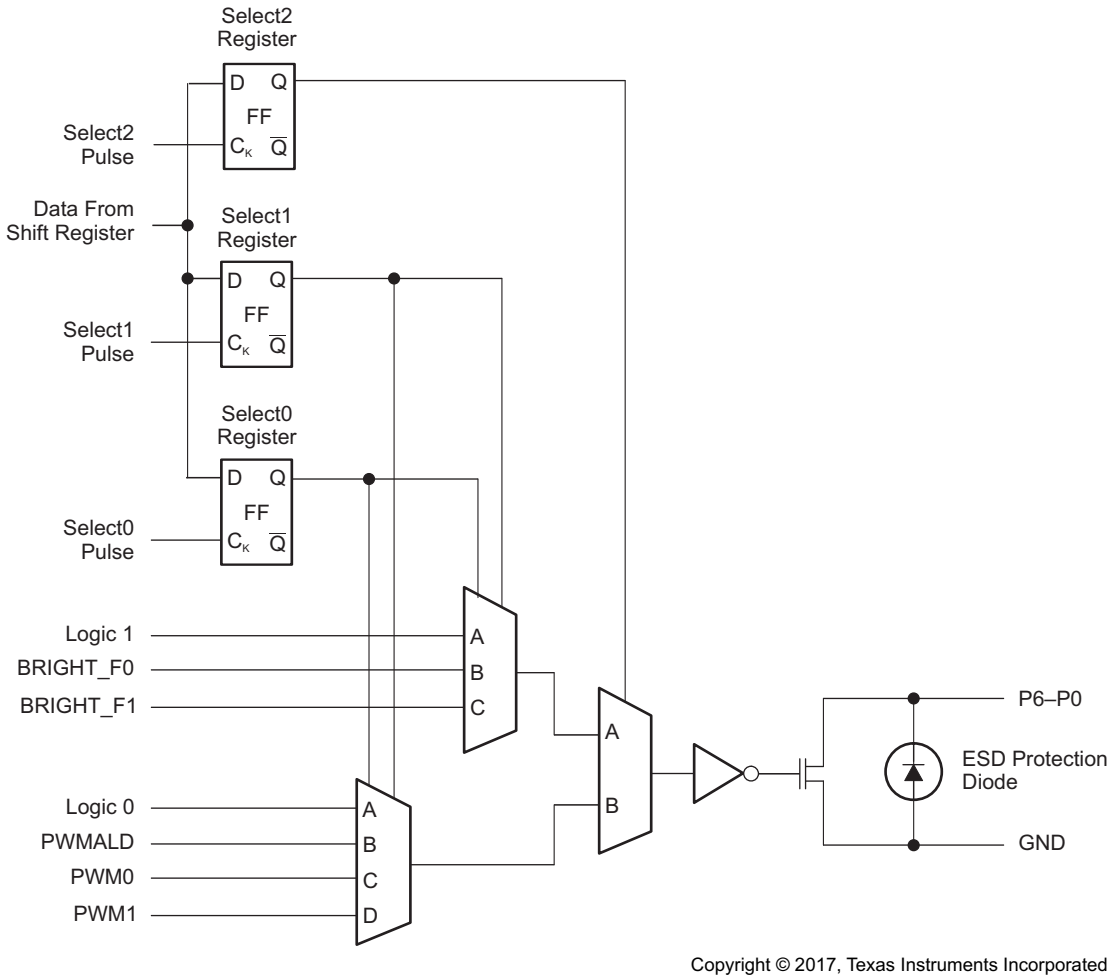

Figure 11. Output Port Simplified Schematic

8.3 Feature Description

8.3.1 Seven LED Driver Outputs

The TCA6507 features 7 outputs that can be controlled with multiple modes: ON, OFF, blinking (one of the two separate banks), and fading at a programmable rate (one of the two separate banks).

8.3.2 Open-Drain Outputs Directly Drive LEDs

The TCA6507 has open-drain outputs (see Figure 11) that are capable of sinking current up to 40 mA for LEDs.

8.3.3 Widely Programmable

The TCA6507 has two separate banks, which can be programmed to do a wide variety of blink rates, fade-ON and fade-OFF rates, as well as maximum intensity (brightness).

8.4 Device Functional Modes

8.4.1 Power-On Reset

When power (from 0 V) is applied to V_{CC}, an internal power-on reset holds the TCA6507 in a reset condition until V_{CC} has reached V_{POR}. At that point, the reset condition is released, and the TCA6507 registers and I^2C/SMBus state machine initialize to their default states.

Device Functional Modes (continued)

After the initial power-up phase, V_{CC} must be lowered to below 0.2 V, and then back up to the operating voltage (V_{CC}) for a power-reset cycle.

8.4.2 Enable and Reset

If the enable (EN) input is set to low, the TCA6507 is put in the standby or shutdown mode. In this mode, the oscillator is turned off, the registers are returned to their default state, and the I^2C/SMBus state machine is initialized. This mode is useful for low-power consumption. An internal filtering circuit prevents negative glitches from accidentally shutting down the device. EN must be low for a minimum of approximately 60 μs to ensure a shutdown state.

The system master can reset the TCA6507 in the event of a timeout or other improper operation by setting EN low for a minimum of approximately 60 μs. This has the same effect as a power-on reset without powering-down the TCA6507.

The oscillator start up time (t_{OSC}) is measured from the point when EN is set high.

8.5 Programming

8.5.1 I^2C Interface

The TCA6507 has a standard bidirectional I^2C interface that is controlled by a master device to be configured or read the status of this device. Each slave on the I^2C bus has a specific device address to differentiate between other slave devices that are on the same I^2C bus. Many slave devices require configuration upon startup to set the behavior of the device. This is typically done when the master accesses internal register maps of the slave, which have unique register addresses. A device can have one, or multiple registers where data is stored, written, or read.

The physical I^2C interface consists of the serial clock (SCL) and serial data (SDA) lines. Both SDA and SCL lines must be connected to V_{CC} through a pullup resistor. The size of the pullup resistor is determined by the amount of capacitance on the I^2C lines. For further details, see the *I^2C Pullup Resistor Calculation* application report. Data transfer may be initiated only when the bus is idle. A bus is considered idle if both SDA and SCL lines are high after a STOP condition.

Figure 12 and Figure 13 show the general procedure for a master to access a slave device:

1. If a master wants to send data to a slave:
   - Master-transmitter sends a START condition and addresses the slave-receiver
   - Master-transmitter sends data to slave-receiver
   - Master-transmitter terminates the transfer with a STOP condition
2. If a master wants to receive or read data from a slave:
   - Master-receiver sends a START condition and addresses the slave-transmitter
   - Master-receiver sends the requested register to read to slave-transmitter
   - Master-receiver receives data from the slave-transmitter

Copyright © 2007–2017, Texas Instruments Incorporated

Programming (continued)

– Master-receiver terminates the transfer with a STOP condition

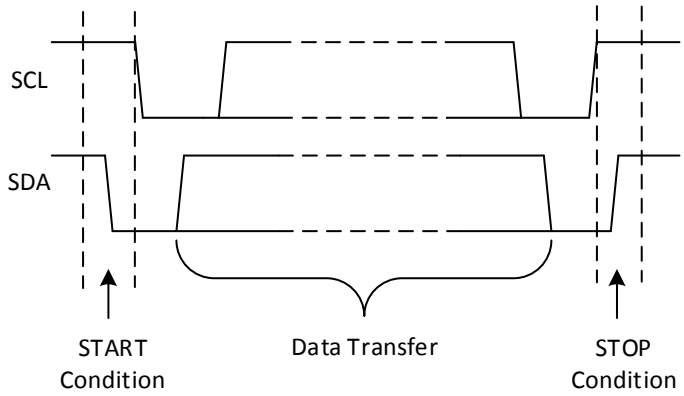

Figure 12. Definition of START and STOP Conditions

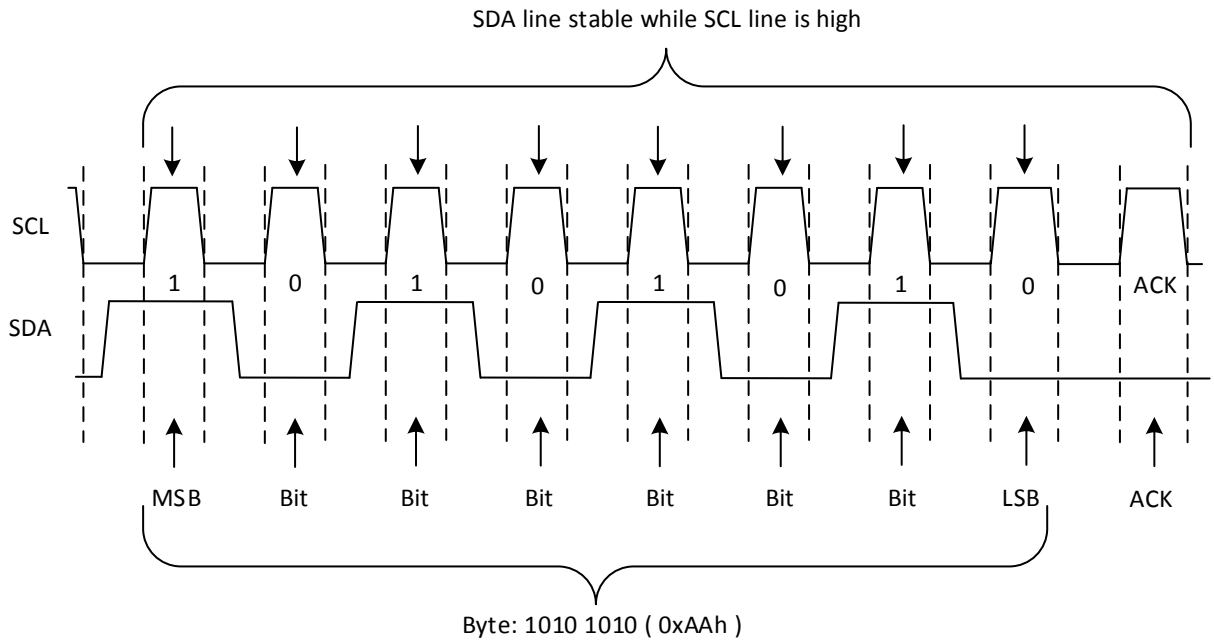

Figure 13. Bit Transfer

8.5.2 Bus Transactions

Data must be sent to and received from the slave devices, and this is accomplished by reading from or writing to registers in the slave device.

Registers are locations in the memory of the slave that contain information, whether it be the configuration information, or some sampled data to send back to the master. The master must write information to these registers to instruct the slave device to perform a task.

Programming (continued)

8.5.2.1 Writes

To write on the I^{2}C bus, the master sends a START condition on the bus with the address of the slave, as well as the last bit (the R/$\overline{W}$ bit) set to 0, which signifies a write. After the slave sends the acknowledge bit, the master then sends the register address of the register to which it wishes to write. The slave acknowledges again, letting the master know it is ready. After this, the master starts sending the register data to the slave until the master has sent all the data necessary (which can be only a single byte), and the master terminates the transmission with a STOP condition.

Figure 14 shows an example of writing a single byte to a register.

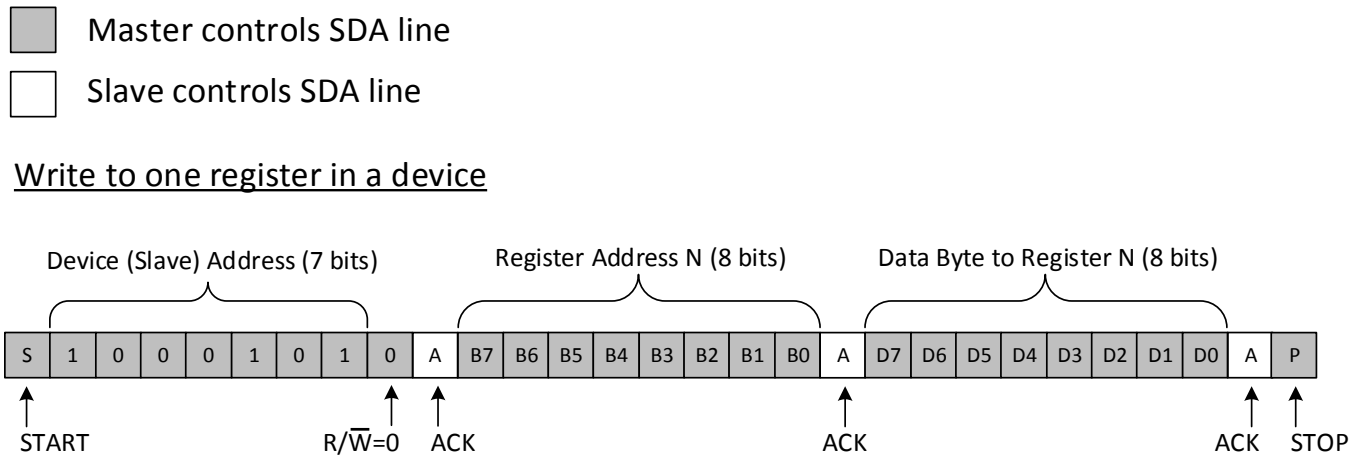

Figure 14. Write to Register

Figure 15 shows an example of writing to a Fully On register.

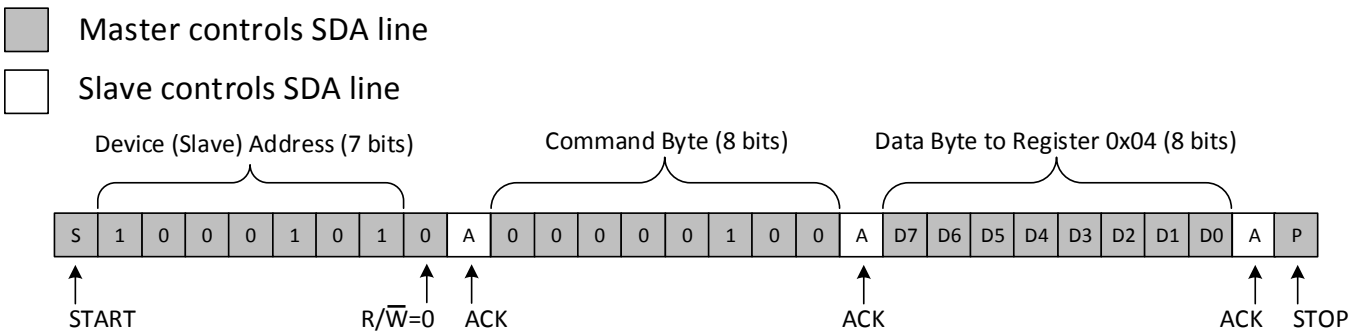

Figure 15. Write to the Fully On Register (0x04)

Copyright © 2007–2017, Texas Instruments Incorporated

Programming (continued)

8.5.2.2 Reads

Reading from a slave is very similar to writing, but requires some additional steps. To read from a slave, the master must first instruct the slave which register it wishes to read from. This is done by the master starting off the transmission in a similar fashion as the write, by sending the address with the R/$\overline{W}$ bit equal to 0 (signifying a write), followed by the register address it wishes to read from. Once the slave acknowledges this register address, the master sends a START condition again, followed by the slave address with the R/$\overline{W}$ bit set to 1 (signifying a read). This time, the slave acknowledges the read request, and the master releases the SDA bus, but continues supplying the clock to the slave. During this part of the transaction, the master becomes the master-receiver, and the slave becomes the slave-transmitter.

The master continues to send out the clock pulses, but releases the SDA line so that the slave can transmit data. At the end of every byte of data, the master sends an ACK to the slave, letting the slave know that it is ready for more data. Once the master has received the number of bytes it is expecting, it sends a NACK, signaling to the slave to halt communications and release the bus. The master follows this up with a STOP condition.

Figure 16 shows an example of reading a single byte from a slave register.

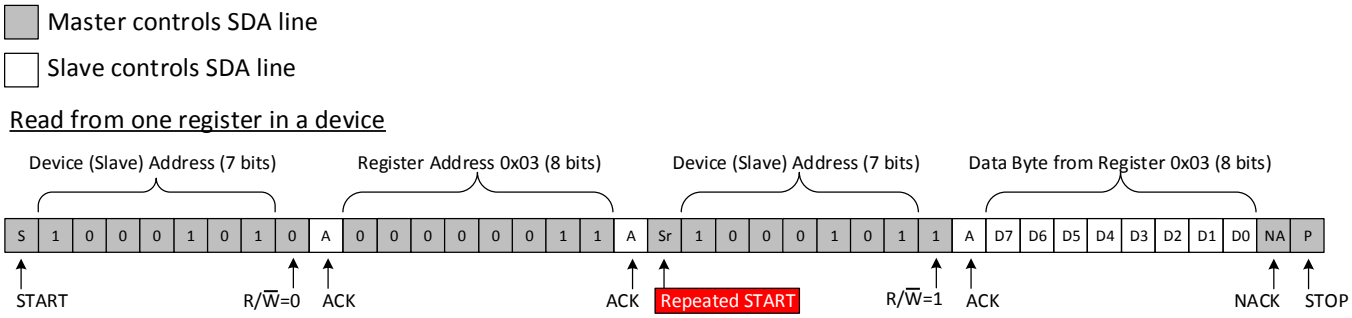

Figure 16. Read From Register Example

8.5.3 Device Address

The address of the TCA6507 is shown in Figure 17.

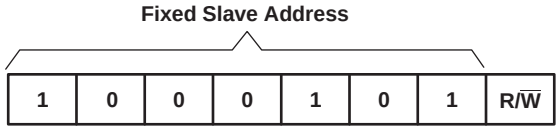

Figure 17. TCA6507 Address

The last bit of the slave address defines the operation (read or write) to be performed. High (1) selects a read operation, and low (0) selects a write operation. Table 2 shows the TCA6507 interface definition.

Table 2. Interface Definition

BYTE	BIT							
	7 (MSB)	6	5	4	3	2	1	0 (LSB)
I^2C slave address	1	0	0	0	1	0	1	R/$\overline{W}$
Px I/O data bus	X(1)	P6	P5	P4	P3	P2	P1	P0

(1) X = Don't care.

8.5.4 Control Register and Command Byte

Following the successful acknowledgment of the address byte, the bus master sends a command byte, which is stored in the control register. The last four bits (B0, B1, B2 and B3) of this command byte determine the internal registers (Select0, Select1, Select2, Fade-ON Time, Fully-ON Time, Fade-OFF Time, First Fully-OFF Time, Second Fully-OFF Time, Maximum Intensity and Initialization) that are affected. The command byte is sent only during a write transmission.

After the command byte is received, the I^2C master starts sending data bytes. The first data byte goes into the internal register defined by the command byte. Bit B4 in the command byte is used to determine the programming mode. If B4 is low, all data bytes are written to the register defined by B0, B1, B2, and B3. If B4 is high, the last four bits of the command byte are automatically incremented after the byte is written, and the next data byte is stored in the corresponding register. Registers are written in the sequence shown in Table 6. Once the Initialization register (register 0×0A) is written to, the command byte returns to 0 (Select0 register).

The upper three bits (B7–B5) of the command byte must be programmed as zeroes for proper operation.

If a STOP condition occurs after the command byte is received, the TCA6507 stores the command byte and then remains idle until the I^2C master sends the next operation.

Figure 18 shows the TCA6507control register bits.

B7	B6	B5	B4	B3	B2	B1	B0

Figure 18. Control Register Bits

Table 3 shows the TCA6507 command byte.

Table 3. Command Byte

BIT	FUNCTION
B7	Reserved. Must be programmed as 0
B6	Reserved. Must be programmed as 0
B5	Reserved. Must be programmed as 0
B4	Auto increment. 1 = Auto increment enabled. 0 = Auto increment disabled
B3	Register address 3
B2	Register address 2
B1	Register address 1
B0	Register address 0

Copyright © 2007–2017, Texas Instruments Incorporated

8.5.5 Auto-Increment Mode

In auto-increment mode, the last four bits of the command byte are automatically incremented after the byte is written, and the next data byte is stored in the corresponding register. See Figure 19.

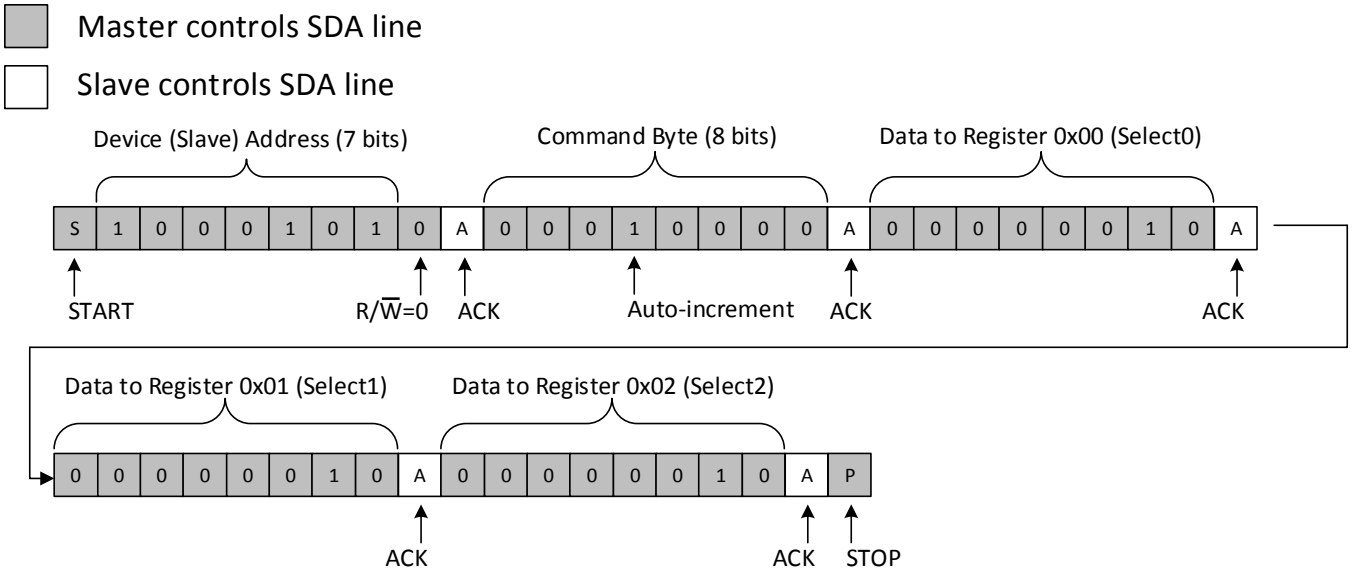

Figure 19.

The registers are written to in the order shown in Table 6.

8.5.6 LED Operation

For LED states, see Figure 10 and Table 8.

It is the combination of Select2, Select1, and Select0 registers that gives the state of the LED or Px.

Bit 0 from the Select0 register, bit = 0 from Select1 register, and bit = 0 from the Select2 register provide the state for P0, or the first LED. Similarly, bit = 1 from the Select0 register, bit 1 from Select1 register, and bit = 1 from the Select2 register provide the state for P1, or the second LED (see Table 4).

Table 4. LED Operation

	MSB							LSB
Select0	X	0	0	0	0	0	0	0
Select1	X	0	0	0	0	0	0	0
Select2	X	0	0	0	0	0	0	0
Output or LED affected	X X	P6 7th LED	P5 6th LED	P4 5th LED	P3 4th LED	P2 3rd LED	P1 2nd LED	P0 1st LED

8.5.7 Blinking Pattern Control

The Fade-ON time, Fully-ON time, Fade-OFF time, First Fully-OFF time, and Second Fully-OFF time registers must be written to for basic blink control. Each of these registers has eight bits – top four bits for BANK1 (or PWM1), and bottom four bits for BANK0 (or PWM0) (see Table 20).

Each BANK or PWM has a default value of 4 (4b0100), which translates to a time of 256 ms. The largest value for each BANK or PWM is 15 (4b1111), which translates to a time of 16320 ms (see Figure 20 and Table 5).

Table 5. Intensity Parameters (see Figure 20)

REGION	PARAMETER NAME	PARAMETER RANGE	REGISTER RANGE	REGISTER NAME	REGISTER
A1, A2	Fade-ON time	0 to 16320 ms (exponential trend)	0 to 15	Fade-ON time	0×03
B1, B2	Fully-ON time	0 to 16320 ms (exponential trend)	0 to 15	Fully-ON time	0×04
C1, C2	Fade-OFF time	0 to 16320 ms (exponential trend)	0 to 15	Fade-OFF time	0×05
D	First fully-OFF time	0 to 16320 ms (exponential trend)	0 to 15	First fully-OFF time	0×06
E	Second fully-OFF time	0 to 16320 ms (exponential trend)	0 to 15	Second fully-OFF time	0×07
F	Maximum intensity	0 to 100%	0 to 15	Maximum intensity	0×08

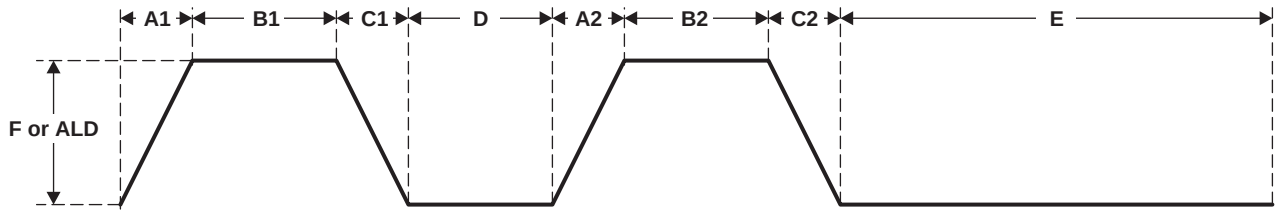

Figure 20. LED Pattern Sections Per Bank

Figure 21 and Figure 22 show the output port intensity vs LED intensity.

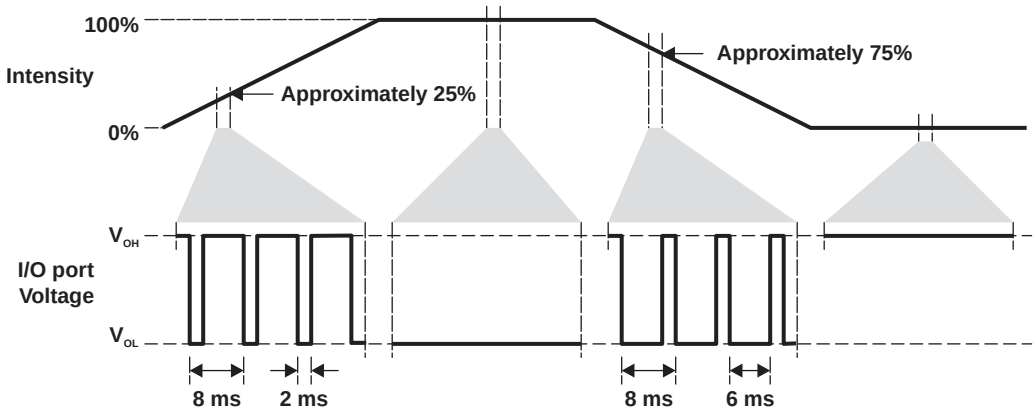

Figure 21. Output Port Voltage vs LED Intensity, Maximum Intensity = 100%

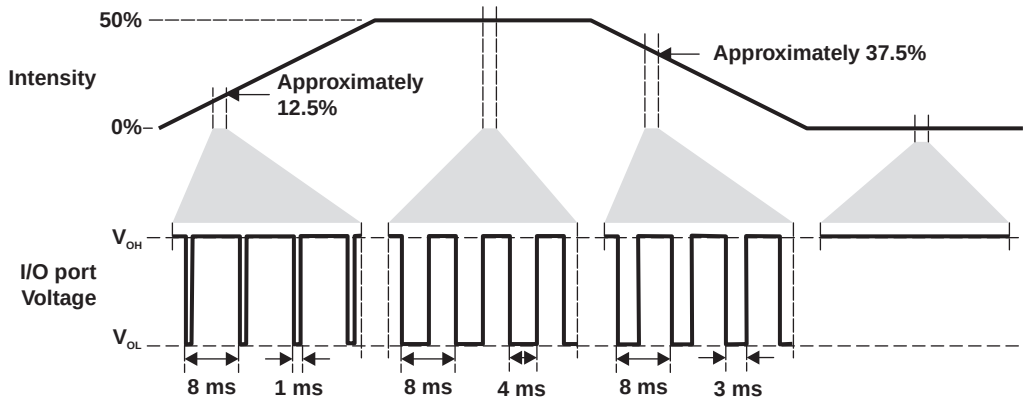

Figure 22. Output Port Voltage vs LED Intensity, Maximum Intensity = 50%

Copyright © 2007–2017, Texas Instruments Incorporated

8.5.8 Intensity Control

The Maximum Intensity registers must be written to for setting the intensity of the LED. This register has eight bits – top four bits for BANK1 (or PWM1), and bottom four bits for BANK0 (or PWM0). This register can be written to after sending data to the Second Fully-OFF Time register (see Table 20).

The Maximum Intensity register has a default value of 15 (1111), which translates to 100% brightness (see Figure 20 and Table 5).

8.6 Register Maps

Table 6 describes the TCA6507 control registers.

Table 6. Control Register Description

CONTROL REGISTER BITS				COMMAND BYTE (HEX)	REGISTER	PROTOCOL	POWER-UP DEFAULT (BINARY)
B3	B2	B1	B0				
0	0	0	0	0x00	Select0	Read/write byte	0000 0000
0	0	0	1	0x01	Select1	Read/write byte	0000 0000
0	0	1	0	0x02	Select2	Read/write byte	0000 0000
0	0	1	1	0x03	Fade-ON Time	Read/write byte	0100 0100
0	1	0	0	0x04	Fully-ON Time	Read/write byte	0100 0100
0	1	0	1	0x05	Fade-OFF Time	Read/write byte	0100 0100
0	1	1	0	0x06	First Fully-OFF Time	Read/write byte	0100 0100
0	1	1	1	0x07	Second Fully-OFF Time	Read/write byte	0100 0100
1	0	0	0	0x08	Maximum Intensity	Read/write byte	1111 1111
1	0	0	1	0x09	One Shot / Master Intensity	Read/write byte	0000 1111
1	0	1	0	0x0A	Initialization	Write byte	N/A

The Select0 register (register 0x00), Select1 (register 0x01), and Select2 register (register 0x02) configure the state of each of the outputs (see Table 8).

Registers that define time periods have a range of 0 to 16320 ms, as defined in Table 7.

Table 7. Time Parameters

CODE (DECIMAL)	TIME (ms)
0	0
1	64
2	128
3	192
4 (default)	256
5	384
6	512
7	768
8	1024
9	1536
10	2048
11	3072
12	4096
13	5760
14	8128
15	16320

Copyright © 2007–2017, Texas Instruments Incorporated

8.6.1 Registers 0x00 - 0x02 (Select Registers)

Table 8 show the Select2, Select1, and Select0 Register States.

Table 8. Select2, Select1, and Select0 Register States

SELECT2	SELECT1	SELECT0	STATE
0	0	0	LED off (high impedance).
0	0	1	LED off (high impedance).
0	1	0	LED on with maximum intensity value of PWM0 (ALD value or BRIGHT_F0 value, depending on One Shot / Master Intensity Register setting).
0	1	1	LED on with maximum intensity value of PWM1 (ALD value or BRIGHT_F1 value, depending on One Shot / Master Intensity Register setting).
1	0	0	LED fully on (output low). Can be used as general-purpose output.
1	0	1	LED on at brightness set by One Shot / Master Intensity register.
1	1	0	LED blinking with intensity characteristics of BANK0 (PWM0).
1	1	1	LED blinking with intensity characteristics of BANK1 (PWM1).

Table 9 show the Register 0x00 (Select0 Register).

Table 9. Register 0x00 (Select0 Register)

BIT	S0-7	S0-6	S0-5	S0-4	S0-3	S0-2	S0-1	S0-0
DEFAULT	X(1)	0	0	0	0	0	0	0

(1) X = Don't care.

Table 10 show the Register 0x01 (Select1 Register).

Table 10. Register 0x01 (Select1 Register)

BIT	S1-7	S1-6	S1-5	S1-4	S1-3	S1-2	S1-1	S1-0
DEFAULT	X(1)	0	0	0	0	0	0	0

(1) X = Don't care.

Table 11 show the Register 0x02 (Select2 Register).

Table 11. Register 0x02 (Select2 Register)

BIT	S2-7	S2-6	S2-5	S2-4	S2-3	S2-2	S2-1	S2-0
DEFAULT	X(1)	0	0	0	0	0	0	0

(1) X = Don't care.

To use a P port as a general-purpose output, Select1 and Select0 registers must be set low (or 0), and then the inverse of the data written to the Select2 bit appears on the open-drain output.

The intensity of each bank of LEDs can be customized by programming six registers: Fade-ON Time, Fully-ON Time, Fade-OFF Time, First Fully-OFF Time, Second Fully-OFF Time, and Maximum Intensity registers. Each bank is designed to produce two identical intensity pulses per blink cycle. Both pulses have the same fade-ON, fully-ON and fade-OFF times, but independent fully-OFF times to achieve a double-blink effect when desired.

Copyright © 2007–2017, Texas Instruments Incorporated

8.6.2 Register 0x03 (Fade-ON Time)

Table 12 shows the Fade-ON Time Register (Register 0x03).

Table 12. Register 0x03 (Fade-ON Time Register)

BANK	BANK1				BANK0			
BIT	C7	C6	C5	C4	C3	C2	C1	C0
DEFAULT	0	1	0	0	0	1	0	0

The Fade-ON Time register (register 0x03) defines the time from the fully-OFF state to the fully-ON state for the LED per region A in Figure 20. The first four bits (C7–C4) in this register set the fade-ON time for BANK1, and the next four bits (C3–C0) set the fade-ON time for BANK0. The data for each bank is a binary number between 0 and 15. For BANK1, the MSB is bit C7, while the least significant bit (LSB) is bit C4. For BANK0, the MSB is bit C3 while the LSB is bit C0. See Table 7 for more information.

8.6.3 Register 0x04 (Fully-ON Time)

Table 13 shows the Fully-ON Time Register (Register 0x04).

Table 13. Register 0x04 (Fully-ON Time Register)

BANK	BANK1				BANK0			
BIT	C7	C6	C5	C4	C3	C2	C1	C0
DEFAULT	0	1	0	0	0	1	0	0

The Fully-ON Time register (register 4) defines the time spent at maximum intensity between the fade-ON state and fade-OFF state for the LED per region B in Figure 20. The first four bits (C7–C4) in this register set the fully-ON time for BANK1, and the next four bits (C3–C0) set the fully-ON time for BANK0. The data for each bank is a binary number between 0 and 15. For BANK1, the MSB is bit C7, while the LSB is bit C4. For BANK0, the most significant bit (MSB) is bit C3, while the LSB is bit C0.

See Table 7 for more information on the possible time values.

8.6.4 Register 0x05 (Fade-OFF Time)

Table 14 shows the Fade-OFF Time Register (Register 0x05).

Table 14. Register 0x05 (Fade-OFF Time Register)

BANK	BANK1				BANK0			
BIT	C7	C6	C5	C4	C3	C2	C1	C0
DEFAULT	0	1	0	0	0	1	0	0

The Fade-OFF Time register (register 5) defines the time from the fully-ON state to the fully-OFF state for the LED per region C in Figure 20. The first four bits (C7–C4) in this register set the fade-OFF time for BANK1, and the next four bits (C3–C0) set the fade-OFF time for BANK0. The data for each bank is a binary number between 0 and 15. For BANK1, the MSB is bit C7, while the LSB is bit C4. For BANK0, the MSB is bit C3, while the least significant bit (LSB) is bit C0.

See Table 7 for more information on the possible time values.

8.6.5 Register 0x06 - 0x07 (Fully-OFF Time)

Table 15 and Table 16 show the Fully-OFF Time register (Register 0x06 - 0x07).

Table 15. Register 0x06 (First Fully-OFF Time Register)

BANK	BANK1				BANK0			
BIT	C7	C6	C5	C4	C3	C2	C1	C0
DEFAULT	0	1	0	0	0	1	0	0

Table 16. Register 0x07 (Second Fully-OFF Time Register)

BANK	BANK1				BANK0			
BIT	C7	C6	C5	C4	C3	C2	C1	C0
DEFAULT	0	1	0	0	0	1	0	0

The first and second Fully-OFF Time registers (registers 6 and 7) define the time spent at zero intensity (in the fully-OFF state of the LED) per region D and E, respectively, in Figure 20. The first four bits (C7–C4) in this register set the fully-OFF time for BANK1, and the next four bits (C3–C0) set the fully-OFF time for BANK0. The data for each bank is a binary number between 0 and 15. For BANK1, the MSB is bit C7, while the LSB is bit C4. For BANK0, the MSB is bit C3, while the LSB is bit C0.

See Table 7 for more information on the possible time values.

Copyright © 2007–2017, Texas Instruments Incorporated

8.6.6 Register 0x08 (Maximum Intensity per Bank)

Table 17 shows the Maximum Intensity Register (Register 0x08).

Table 17. Register 0x08 (Maximum Intensity Register)

BANK	BANK1				BANK0			
BIT	C7	C6	C5	C4	C3	C2	C1	C0
DEFAULT	1	1	1	1	1	1	1	1

The Maximum Intensity register defines the duty cycle of the waveform driving the LED in its fully-ON state per region F in Figure 20. The first four bits (C7–C4) in this register set the duty cycle for BANK1 and the next four bits (C3–C0) set the duty cycle for BANK0. The data for each bank is a binary number between 0 and 15. For BANK1, the MSB is bit C7, while the LSB is bit C4. For BANK0, the MSB is bit C3, while the LSB is bit C0. The values in this register also define the LED intensity indicated by the BRIGHT_F0 or BRIGHT_F1 modes. The intensity of each LED is updated 125 times per second (every 8 ms with a 32-kHz clock).

The values for each value are shown in Table 18.

Table 18. Brightness Register Values

Code		Brightness
Decimal	Nibble (Hex)	
0	0x0	0 %
1	0x1	6.67%
2	0x2	13.33%
3	0x3	20.00%
4	0x4	26.67 %
5	0x5	33.33 %
6	0x6	40.00 %
7	0x7	46.67 %
8	0x8	53.33 %
9	0x9	60.00 %
10	0xA	66.67 %
11	0xB	73.33 %
12	0xC	80.00 %
13	0xD	86.67 %
14	0xE	93.33 %
15	0xF	100 %

Copyright © 2007–2017, Texas Instruments Incorporated

8.6.7 Register 0x09 (One-Shot / Master Intensity)

The One-Shot / Master Intensity register (register 9) is an 8-bit register with three functions.

Bits 0–3 set the master intensity value (ALD). It is a binary number between 0 and 15.

Bits 4–5 determine whether the maximum intensity of PWM0 and PWM1 is set by the programmed F value (BRIGHT_F0 or BRIGHT_F1) or the master ALD value. The default value for these bits is 0. Bit 4 supports PWM0 and bit 5 is for PWM1. If bit 4 (or bit 5) is 0, the maximum intensity value for PWM0 (or PWM1) is set by the F value. If bit 4 (or bit 5) is 1, the maximum intensity value for PWM0 (or PWM1) is set by the master ALD value. This allows the user to vary the brightness of all LEDs by changing a single register.

Bits 6–7 determine whether each PWM operates in normal or one-shot mode. Bit 6 supports PWM0 and bit 7 is for PWM1. If bit 6 (or bit 7) is 0, PWM0 (or PWM1) operates in the normal mode where the LEDs goes through the full intensity cycle defined by Table 5 and Figure 20. If bit 6 (or bit 7) is 1, PWM0 (or PWM1) operate in the one-shot mode. In this mode, the LEDs can be used to create a single-shot lighting effect where the LED intensity is valid for a particular segment of the cycle shown in Table 5 and Figure 20. As a note for users who plan to use one-shot mode, the time register corresponding to the sections for the desired one-shot starting location, and immediately after must both have non-zero values in the registers for time in order for one-shot to function as expected.

Table 19 shows the One-Shot / Master Intensity Register.

Table 19. One-Shot / Master Intensity Register

BIT	DESCRIPTION
0–3	Master intensity (ALD) value. Valid values are 0 to 15. See Table 18 for more information
4	Determines whether maximum intensity of PWM0 is set by the programmed F value or the master ALD value 0 = F value 1 = ALD value
5	Determines whether maximum intensity of PWM1 is set by the programmed F value or the master ALD value 0 = F value defined in Maximum Intensity per Bank Register (0x08) 1 = ALD value
6	Determines if PWM0 operates in normal or one-shot mode 0 = Normal mode 1 = One-shot mode
7	Determines if PWM1 operates in normal or one-shot mode 0 = Normal mode 1 = One-shot mode

Copyright © 2007–2017, Texas Instruments Incorporated

8.6.8 Register 0x0A (Initialization Register)

The Initialization register (register 0x0A) determines whether to initialize each PWM and, if so, provides the starting point of the LED intensity cycle for each bank. Bits 0–3 (C0–C3) are for BANK0 and bits 4–7 (C4–C7) are for BANK1. Table 20 shws the Initialization Register (Register 0x0A).

Bits 0–2 provide the starting point for PWM0. If bit 3 is high (or 1), it initializes PWM0.

Bits 4–6 provide the starting point for PWM1. If bit 7 is high (or 1), it initialized PWM1.

In the one-shot mode for BANK0, the LEDs start at the beginning of the region defined by C2, C1, and C0 in the Initialization register and, when it reaches the end of that region, the LED stays at that intensity level defined at the end of the region. When the stop point is reached, all P ports attached to PWM0 disconnect from PWM0, and stay at either the maximum intensity level for PWM0 (BRIGHT_F0 or ALD value), or the OFF state. The bits in the Select2 and Select1 registers change to reflect the final state of the LED at that time. PWM0 continues running, and is free to be used by other LEDs. The one-shot mode works similarly for BANK1.

Upon writing to this register, each bank is initialized to the state listed in Table 21 and Table 22.

Table 20. Register 0x0A (Initialization Register)

BANK	BANK1				BANK0			
BIT	C7	C6	C5	C4	C3	C2	C1	C0

Table 21. Bank 1 Initialization Register

C7	C6	C5	C4	INTENSITY CYCLE
1	0	0	0	Beginning at region A1 in Table 5 and Figure 18
1	0	0	1	Beginning at region B1 in Table 5 and Figure 18
1	0	1	0	Beginning at region C1 in Table 5 and Figure 18
1	0	1	1	Beginning at region D in Table 5 and Figure 18
1	1	0	0	Beginning at region A2 in Table 5 and Figure 18
1	1	0	1	Beginning at region B2 in Table 5 and Figure 18
1	1	1	0	Beginning at region C2 in Table 5 and Figure 18
1	1	1	1	Beginning at region E in Table 5 and Figure 18

Table 22. Bank 0 Initialization Register

C3	C2	C1	C0	STARTING POINT OF INTENSITY CYCLE
1	0	0	0	Beginning at region A1 in Table 5 and Figure 18
1	0	0	1	Beginning at region B1 in Table 5 and Figure 18
1	0	1	0	Beginning at region C1 in Table 5 and Figure 18
1	0	1	1	Beginning at region D in Table 5 and Figure 18
1	1	0	0	Beginning at region A2 in Table 5 and Figure 18
1	1	0	1	Beginning at region B2 in Table 5 and Figure 18
1	1	1	0	Beginning at region C2 in Table 5 and Figure 18
1	1	1	1	Beginning at region E in Table 5 and Figure 18

Copyright © 2007–2017, Texas Instruments Incorporated

9 Application and Implementation

NOTE

Information in the following applications sections is not part of the TI component specification, and TI does not warrant its accuracy or completeness. TI's customers are responsible for determining suitability of components for their purposes. Customers must validate and test their design implementation to confirm system functionality.

9.1 Application Information

Applications of the TCA6507 contains an I^2C (or SMBus) master device. The TCA6507 is used to control the blinking pattern of LEDs or as a general purpose output.

9.2 Typical Application

Figure 23 shows a general application in which the TCA6507 can be used. Each LED output is driving one LED. Figure 26 highlights another application where the TPS61052 boost converter and high-power LED driver and TCA6507 7-bit LED driver can be used in combination for applications requiring flashlight functionality and/or high-brightness indicator/backlight LEDs.

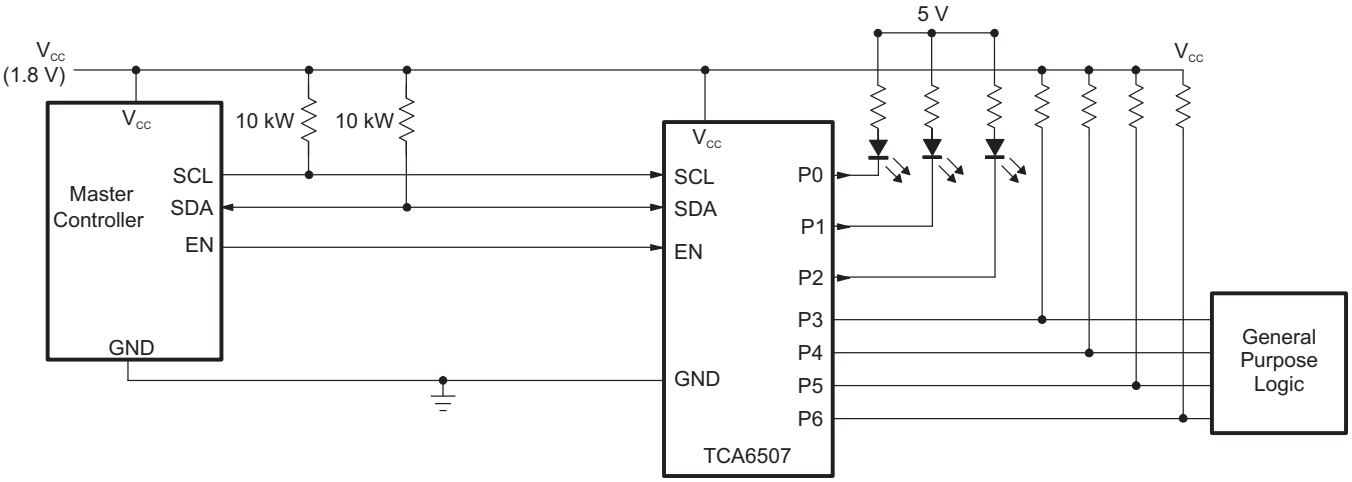

Copyright © 2017, Texas Instruments Incorporated

Figure 23. Typical Application

9.2.1 Design Requirements

For the typical application example, the TCA6507 is set up to blink the P0 with Bank0 pattern, P1 fully on, and P2 with Bank1 blinking pattern. The banks is setup to the flashing pattern defined in Figure 24. The options for lengths of time for each section can be seen in Table 7.

Copyright © 2007–2017, Texas Instruments Incorporated

Typical Application (continued)

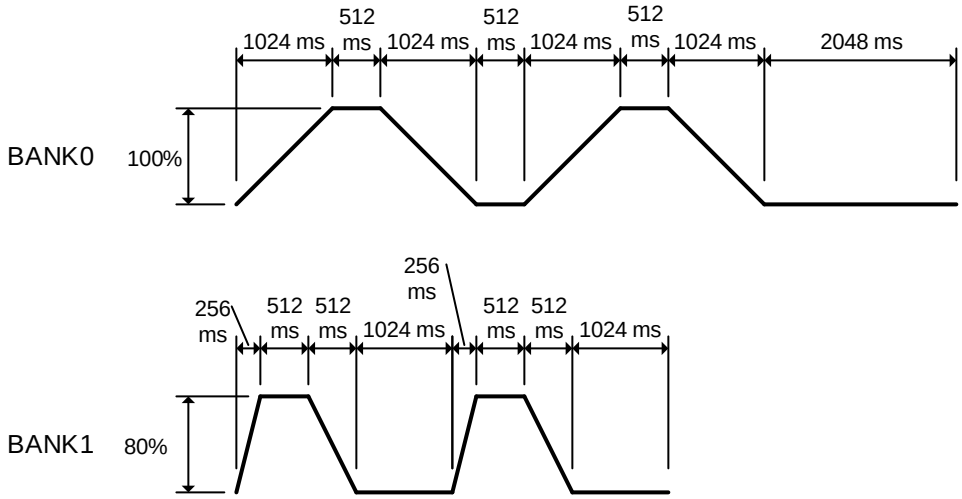

Figure 24. Blinking Pattern for the Two Banks

9.2.2 Detailed Design Procedure

For the typical application blinking pattern seen in Figure 24, the desired values are listed in Table 23, with the corresponding registers and values.

Table 23. LED Pattern

SECTION	BANK1 VALUE	BANK0 VALUE	UNIT	REGISTER	BANK1 NIBBLE (HEX)	BANK0 NIBBLE (HEX)	REGISTER VALUE (HEX)
Fade-ON time	256	1024	ms	0x03	0x4	0x8	0x48
Fully-ON time	512	512	ms	0x04	0x6	0x6	0x66
Fade-OFF time	512	1024	ms	0x05	0x6	0x8	0x68
First fully-OFF time	1024	512	ms	0x06	0x8	0x6	0x86
Second fully-OFF time	1024	2048	ms	0x07	0x8	0xA	0x8A
Maximum brightness	62.5	100	%	0x08	0x9	0xF	0x9F

The select register values are shown in Table 24.

Table 24. Select Registers

REGISTER		VALUE (BINARY)	VALUE (HEX)
NAME	ADDRESS		
SELECT0	0x00	8b0000 0100	0x04
SELECT1	0x01	8b0000 0101	0x05
SELECT2	0x02	8b0000 0111	0x07

With the above values for the appropriate registers, the next step must be to write the values to the device. This can be accomplished very easily with the auto-increment feature (see the *Auto-Increment Mode* section for more information).

Table 25. Writing to Registers

BYTE #	BYTE	DESCRIPTION
1	0x89	Address and write bit
2	0x10	Command byte with auto-increment
3	0x04	Write to SELECT0 register
4	0x05	Write to SELECT1 register
5	0x06	Write to SELECT2 register
6	0x48	Write to Fade-ON Time register
7	0x66	Write to Fully-ON Time register
8	0x68	Write to Fade-OFF Time register
9	0x86	Write to First Fully-OFF Time register
10	0x8A	Write to Second Fully-OFF Time register
11	0x9F	Write to Maximum Brightness register

After the above bytes in Table 25 are written to the device, the LEDs blinks according to the defined pattern.

9.2.3 Application Curve

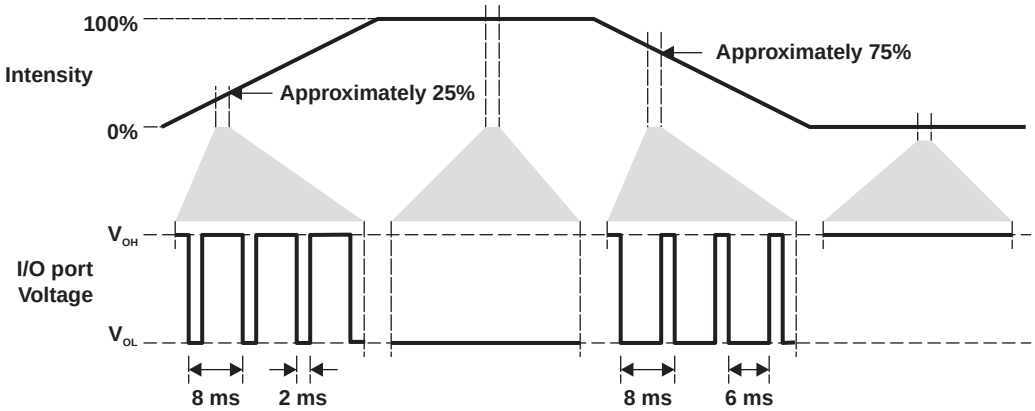

Figure 25. Output Port Voltage vs LED Intensity, Maximum Intensity = 100%

Copyright © 2007–2017, Texas Instruments Incorporated

9.3 System Example

Figure 26 highlights another application where the TPS61052 boost converter and high-power LED driver and TCA6507 7-bit LED driver can be used in combination for applications requiring flashlight functionality, high-brightness indicator and backlight LEDs, or both.

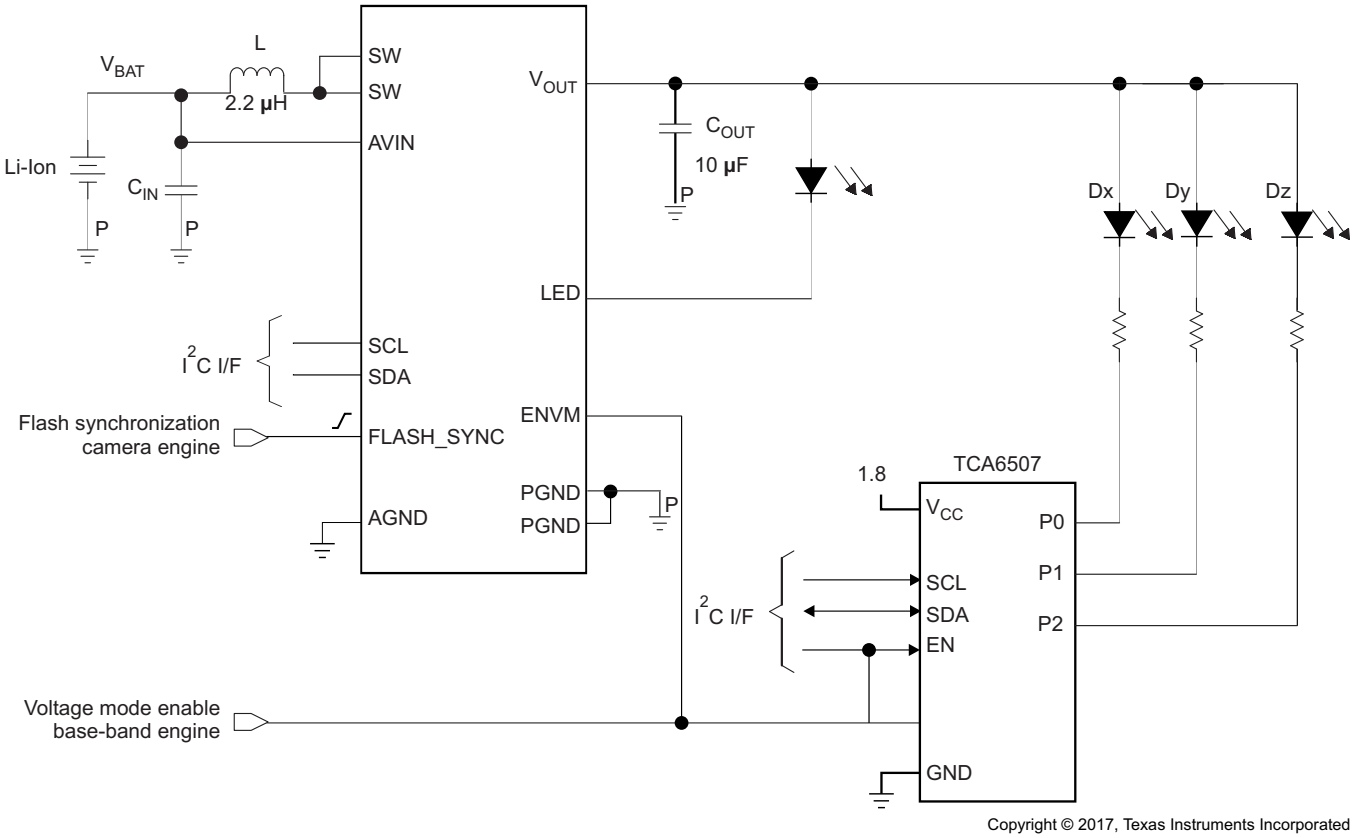

Figure 26. White LED Flashlight Driver and High-Brightness LED Indicator/Backlight Power Supply

10 Power Supply Recommendations

10.1 Power-On Reset Requirements

In the event of a glitch or data corruption, the TCA6507 can be reset to its default conditions by using the power-on reset feature. Power-on reset requires that the device go through a power cycle to be completely reset. This reset also happens when the device is powered on for the first time in an application.

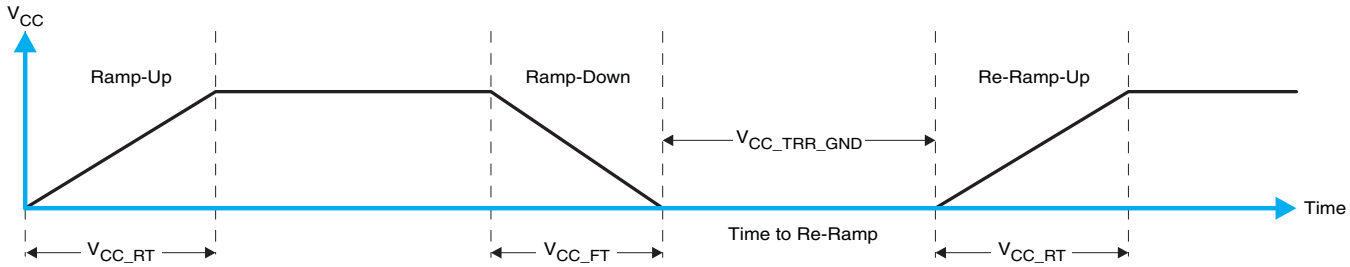

Figure 27. V_{CC} Is Lowered to 0 V and Then Ramped Up to V_{CC}

The *Table 26* section specifies the performance of the power-on reset feature for TCA6507.

Table 26. Recommended Supply Sequencing and Ramp Rates when EN is Connected to V_{CC} (1)

PARAMETER			MIN	TYP	MAX	UNIT
V_{CC_FT}	Fall rate	See Figure 27	0.01		100	ms
V_{CC_RT}	Rise rate	See Figure 27	0.01		100	ms
$V_{CC_TRR_GND}$	Time spent low before re-ramp (when V_{CC} drops to GND)	See Figure 27	500			ms

(1) T_A = –40°C to +85°C (unless otherwise noted)

If the EN pin is controlled independently from VCC, ramp rates and times outside these recommended limits. EN must be ramped after supply to ensure correct power-on reset sequence.

Copyright © 2007–2017, Texas Instruments Incorporated

11 Layout

11.1 Layout Guidelines

For PCB layout of the TCA6507, common PCB layout practices must be followed, but additional concerns related to high-speed data transfer, such as matched impedances and differential pairs, are not a concern for I^2C signals speeds. It is common to have a dedicated ground plane on an inner layer of the board, and pins that are connected to ground must have a low-impedance path to the ground plane in the form of wide polygon pours, and multiple vias. By-pass and de-coupling capacitors are commonly used to control the voltage on the VCC pin, using a larger capacitor to provide additional power in the event of a short power supply glitch, and a smaller capacitor to filter out high-frequency ripple.

11.2 Layout Example

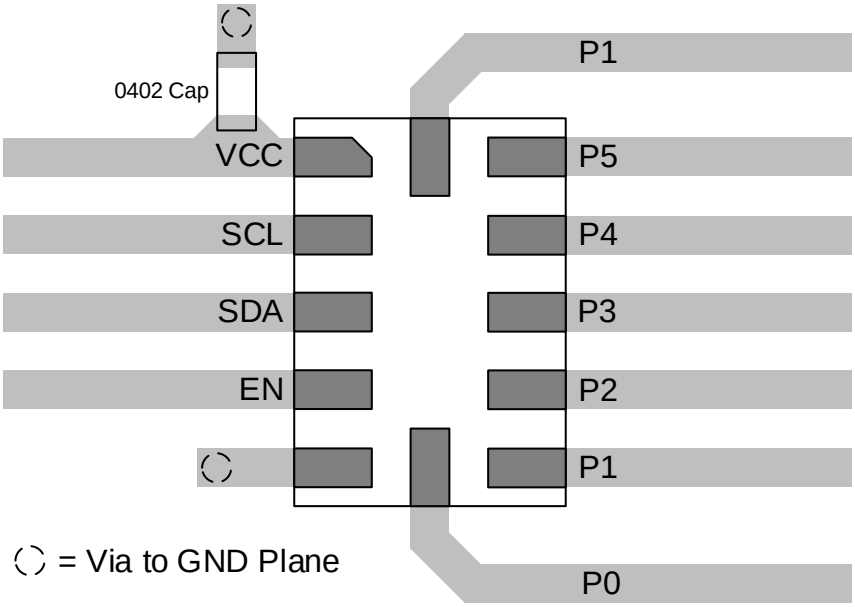

Figure 28. RUE Layout Recommendation

12 Device and Documentation Support

12.1 Documentation Support

12.1.1 Related Documentation

For related documentation, see the following:

- *I2C Bus Pullup Resistor Calculation*
- *Introduction to Logic*
- *Maximum Clock Frequency of I2C Bus Using Repeaters*
- *Programming Fun Lights With the TI TCA6507*
- *Understanding the I2C Bus*

12.2 Receiving Notification of Documentation Updates

To receive notification of documentation updates, navigate to the device product folder on ti.com. In the upper right corner, click on *Alert me* to register and receive a weekly digest of any product information that has changed. For change details, review the revision history included in any revised document.

12.3 Community Resources

The following links connect to TI community resources. Linked contents are provided "AS IS" by the respective contributors. They do not constitute TI specifications and do not necessarily reflect TI's views; see TI's Terms of Use.

TI E2E™ Online Community ***TI's Engineer-to-Engineer (E2E) Community.*** Created to foster collaboration among engineers. At e2e.ti.com, you can ask questions, share knowledge, explore ideas and help solve problems with fellow engineers.

Design Support ***TI's Design Support*** Quickly find helpful E2E forums along with design support tools and contact information for technical support.

12.4 Trademarks

E2E is a trademark of Texas Instruments.
All other trademarks are the property of their respective owners.

12.5 Electrostatic Discharge Caution

These devices have limited built-in ESD protection. The leads should be shorted together or the device placed in conductive foam during storage or handling to prevent electrostatic damage to the MOS gates.

12.6 Glossary

SLYZ022 — *TI Glossary*.

This glossary lists and explains terms, acronyms, and definitions.

13 Mechanical, Packaging, and Orderable Information

The following pages include mechanical, packaging, and orderable information. This information is the most current data available for the designated devices. This data is subject to change without notice and revision of this document. For browser-based versions of this data sheet, refer to the left-hand navigation.

Copyright © 2007–2017, Texas Instruments Incorporated

PACKAGING INFORMATION

Orderable Device	Status (1)	Package Type	Package Drawing	Pins	Package Qty	Eco Plan (2)	Lead/Ball Finish (6)	MSL Peak Temp (3)	Op Temp (°C)	Device Marking (4/5)	Samples
TCA6507PW	ACTIVE	TSSOP	PW	14	90	Green (RoHS & no Sb/Br)	CU NIPDAU	Level-1-260C-UNLIM	-40 to 85	PH507	Samples
TCA6507PWG4	ACTIVE	TSSOP	PW	14	90	Green (RoHS & no Sb/Br)	CU NIPDAU	Level-1-260C-UNLIM	-40 to 85	PH507	Samples
TCA6507PWR	ACTIVE	TSSOP	PW	14	2000	Green (RoHS & no Sb/Br)	CU NIPDAU	Level-1-260C-UNLIM	-40 to 85	PH507	Samples
TCA6507PWRG4	ACTIVE	TSSOP	PW	14	2000	Green (RoHS & no Sb/Br)	CU NIPDAU	Level-1-260C-UNLIM	-40 to 85	PH507	Samples
TCA6507RUER	ACTIVE	X2QFN	RUE	12	3000	Green (RoHS & no Sb/Br)	CU NIPDAU	Level-1-260C-UNLIM		2M	Samples

(1) The marketing status values are defined as follows:
ACTIVE: Product device recommended for new designs.
LIFEBUY: TI has announced that the device will be discontinued, and a lifetime-buy period is in effect.
NRND: Not recommended for new designs. Device is in production to support existing customers, but TI does not recommend using this part in a new design.
PREVIEW: Device has been announced but is not in production. Samples may or may not be available.
OBSOLETE: TI has discontinued the production of the device.

(2) **RoHS:** TI defines "RoHS" to mean semiconductor products that are compliant with the current EU RoHS requirements for all 10 RoHS substances, including the requirement that RoHS substance do not exceed 0.1% by weight in homogeneous materials. Where designed to be soldered at high temperatures, "RoHS" products are suitable for use in specified lead-free processes. TI may reference these types of products as "Pb-Free".
RoHS Exempt: TI defines "RoHS Exempt" to mean products that contain lead but are compliant with EU RoHS pursuant to a specific EU RoHS exemption.
Green: TI defines "Green" to mean the content of Chlorine (Cl) and Bromine (Br) based flame retardants meet JS709B low halogen requirements of <=1000ppm threshold. Antimony trioxide based flame retardants must also meet the <=1000ppm threshold requirement.

(3) MSL, Peak Temp. - The Moisture Sensitivity Level rating according to the JEDEC industry standard classifications, and peak solder temperature.

(4) There may be additional marking, which relates to the logo, the lot trace code information, or the environmental category on the device.

(5) Multiple Device Markings will be inside parentheses. Only one Device Marking contained in parentheses and separated by a "~" will appear on a device. If a line is indented then it is a continuation of the previous line and the two combined represent the entire Device Marking for that device.

(6) Lead/Ball Finish - Orderable Devices may have multiple material finish options. Finish options are separated by a vertical ruled line. Lead/Ball Finish values may wrap to two lines if the finish value exceeds the maximum column width.

Important Information and Disclaimer: The information provided on this page represents TI's knowledge and belief as of the date that it is provided. TI bases its knowledge and belief on information provided by third parties, and makes no representation or warranty as to the accuracy of such information. Efforts are underway to better integrate information from third parties. TI has taken and continues to take reasonable steps to provide representative and accurate information but may not have conducted destructive testing or chemical analysis on incoming materials and chemicals. TI and TI suppliers consider certain information to be proprietary, and thus CAS numbers and other limited information may not be available for release.

In no event shall TI's liability arising out of such information exceed the total purchase price of the TI part(s) at issue in this document sold by TI to Customer on an annual basis.

TAPE AND REEL INFORMATION

REEL DIMENSIONS

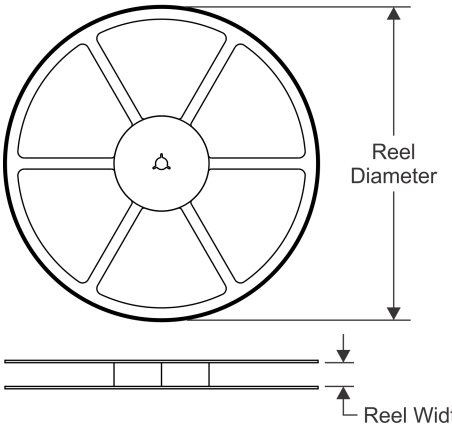

TAPE DIMENSIONS

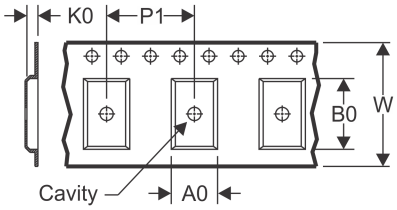

A0	Dimension designed to accommodate the component width
B0	Dimension designed to accommodate the component length
K0	Dimension designed to accommodate the component thickness
W	Overall width of the carrier tape
P1	Pitch between successive cavity centers

QUADRANT ASSIGNMENTS FOR PIN 1 ORIENTATION IN TAPE

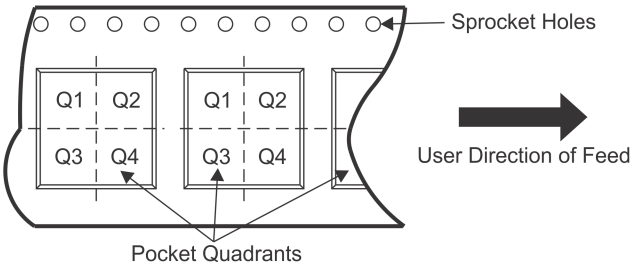

*All dimensions are nominal

Device	Package Type	Package Drawing	Pins	SPQ	Reel Diameter (mm)	Reel Width W1 (mm)	A0 (mm)	B0 (mm)	K0 (mm)	P1 (mm)	W (mm)	Pin1 Quadrant
TCA6507PWR	TSSOP	PW	14	2000	330.0	12.4	6.9	5.6	1.6	8.0	12.0	Q1
TCA6507RUER	X2QFN	RUE	12	3000	179.0	8.4	1.6	2.2	0.55	4.0	8.0	Q1

TAPE AND REEL BOX DIMENSIONS

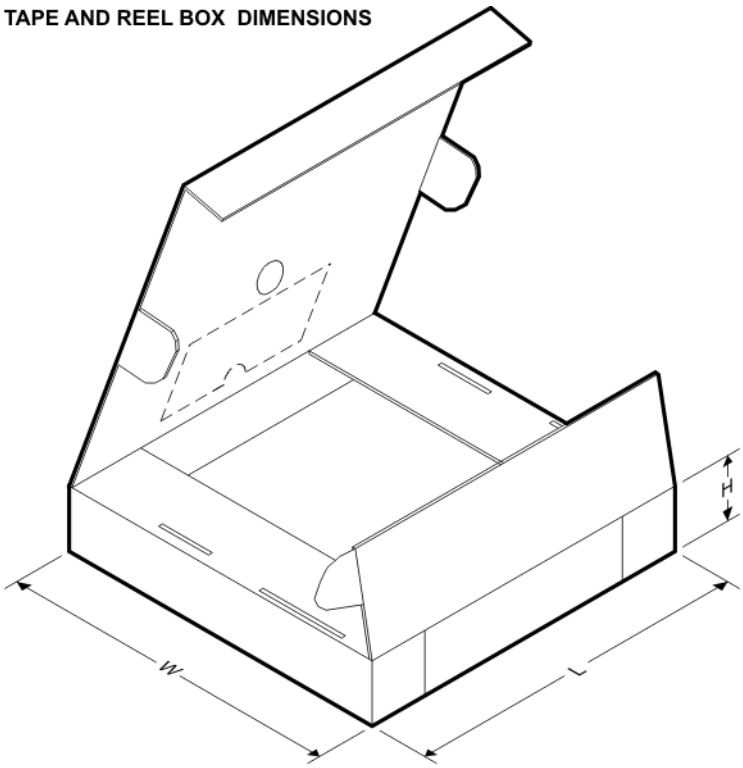

*All dimensions are nominal

Device	Package Type	Package Drawing	Pins	SPQ	Length (mm)	Width (mm)	Height (mm)
TCA6507PWR	TSSOP	PW	14	2000	367.0	367.0	35.0
TCA6507RUER	X2QFN	RUE	12	3000	203.0	203.0	35.0

RUE (R-PX2QFN-N12) PLASTIC QUAD FLATPACK NO-LEAD

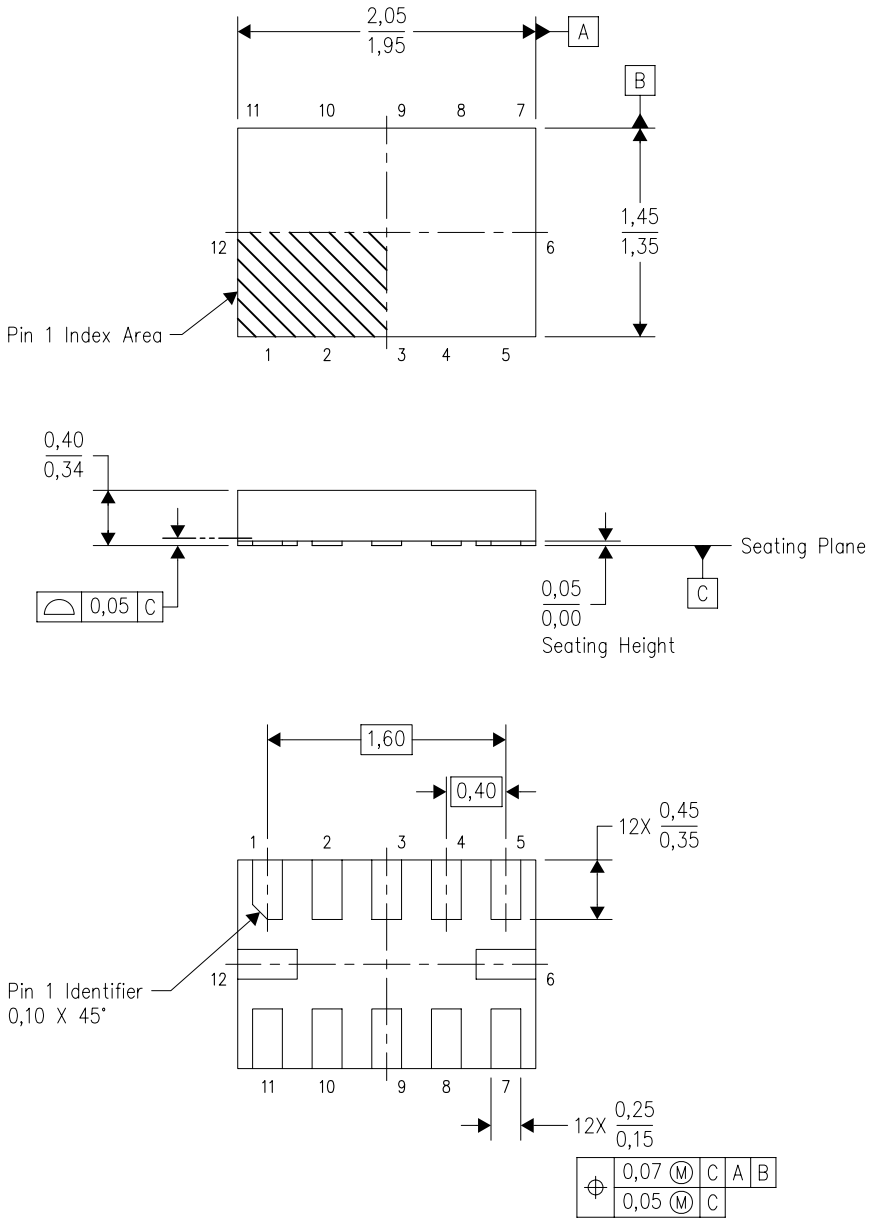

4208463/C 07/2008

NOTES:
A. All linear dimensions are in millimeters. Dimensioning and tolerancing per ASME Y14.5M-1994.
B. This drawing is subject to change without notice.
C. QFN (Quad Flatpack No-lead) package configuration.
D. This package complies to JEDEC MO-288 variation X2DFE.

RUE (R–PX2QFN–N12) PLASTIC QUAD FLATPACK NO–LEAD

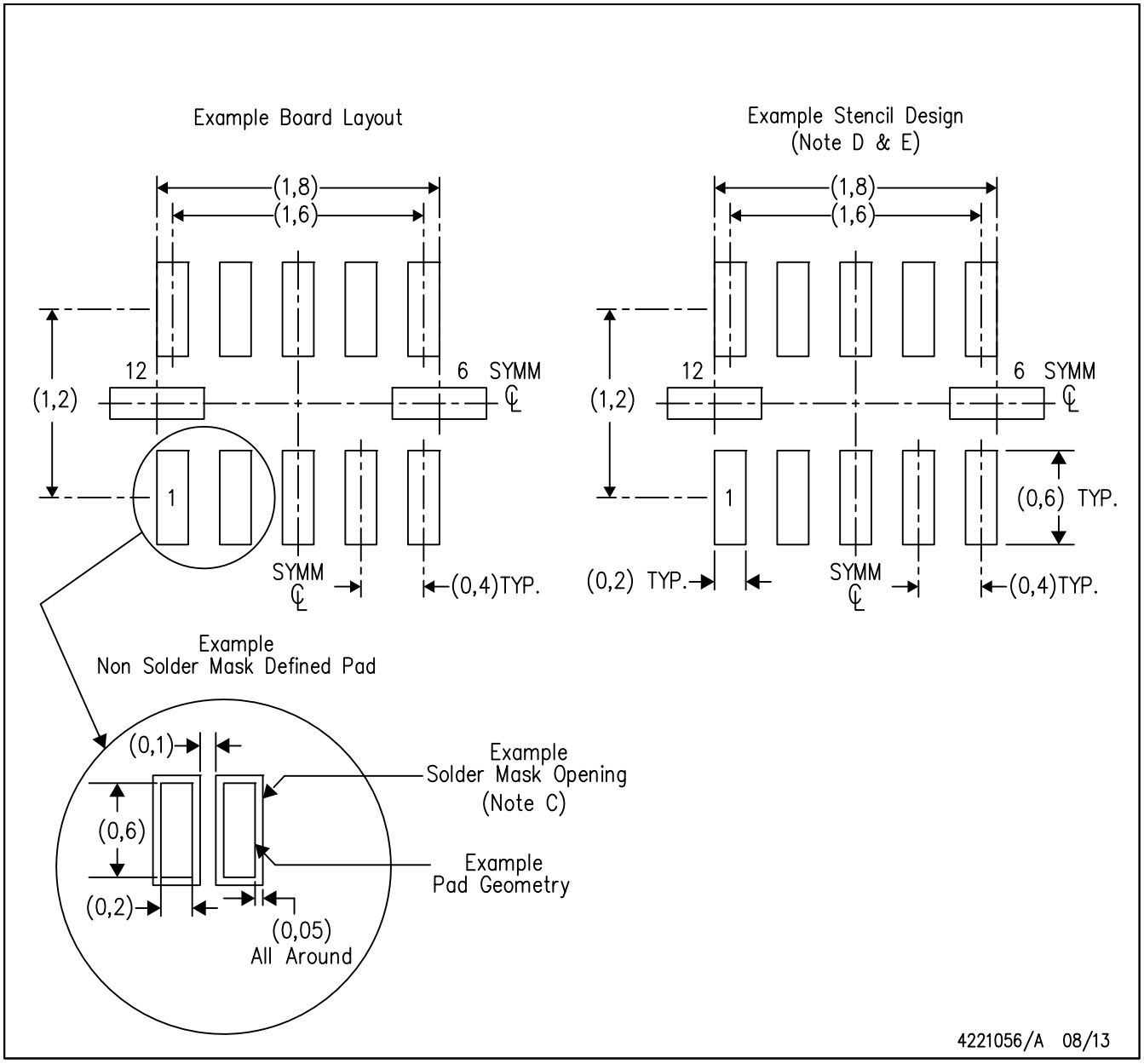

NOTES:
A. All linear dimensions are in millimeters.
B. This drawing is subject to change without notice.
C. Customers should contact their board fabrication site for minimum solder mask web tolerances between signal pads.
D. Maximum stencil thickness 0,1 mm (4 mils).
E. Laser cutting apertures with trapezoidal walls and also rounding corners will offer better paste release. Customers should contact their board assembly site for stencil design recommendations. Refer to IPC 7525 for stencil design considerations.

PW (R–PDSO–G14) PLASTIC SMALL OUTLINE

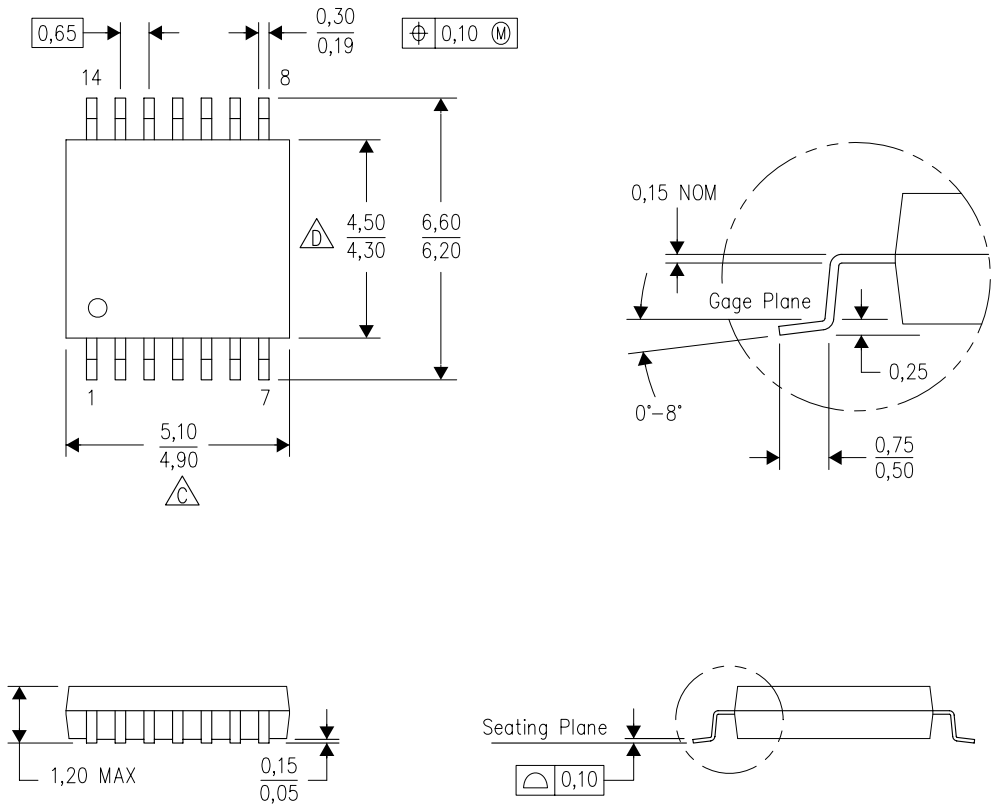

NOTES:
A. All linear dimensions are in millimeters. Dimensioning and tolerancing per ASME Y14.5M–1994.
B. This drawing is subject to change without notice.
C. Body length does not include mold flash, protrusions, or gate burrs. Mold flash, protrusions, or gate burrs shall not exceed 0,15 each side.
D. Body width does not include interlead flash. Interlead flash shall not exceed 0,25 each side.
E. Falls within JEDEC MO–153

PW (R–PDSO–G14) PLASTIC SMALL OUTLINE

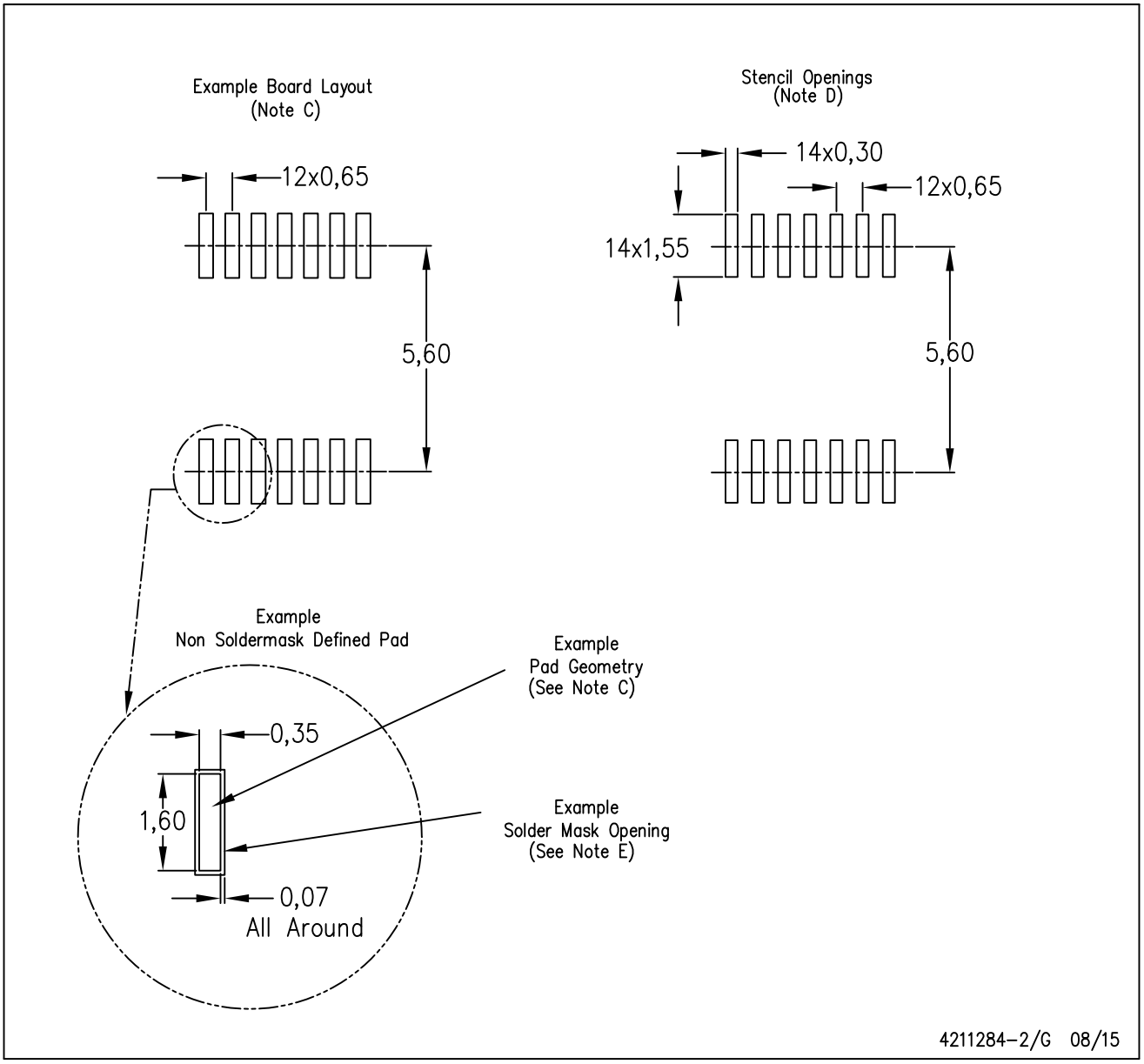

NOTES:
A. All linear dimensions are in millimeters.
B. This drawing is subject to change without notice.
C. Publication IPC–7351 is recommended for alternate designs.
D. Laser cutting apertures with trapezoidal walls and also rounding corners will offer better paste release. Customers should contact their board assembly site for stencil design recommendations. Refer to IPC–7525 for other stencil recommendations.
E. Customers should contact their board fabrication site for solder mask tolerances between and around signal pads.

IMPORTANT NOTICE AND DISCLAIMER

TI PROVIDES TECHNICAL AND RELIABILITY DATA (INCLUDING DATASHEETS), DESIGN RESOURCES (INCLUDING REFERENCE DESIGNS), APPLICATION OR OTHER DESIGN ADVICE, WEB TOOLS, SAFETY INFORMATION, AND OTHER RESOURCES “AS IS” AND WITH ALL FAULTS, AND DISCLAIMS ALL WARRANTIES, EXPRESS AND IMPLIED, INCLUDING WITHOUT LIMITATION ANY IMPLIED WARRANTIES OF MERCHANTABILITY, FITNESS FOR A PARTICULAR PURPOSE OR NON-INFRINGEMENT OF THIRD PARTY INTELLECTUAL PROPERTY RIGHTS.

These resources are intended for skilled developers designing with TI products. You are solely responsible for (1) selecting the appropriate TI products for your application, (2) designing, validating and testing your application, and (3) ensuring your application meets applicable standards, and any other safety, security, or other requirements. These resources are subject to change without notice. TI grants you permission to use these resources only for development of an application that uses the TI products described in the resource. Other reproduction and display of these resources is prohibited. No license is granted to any other TI intellectual property right or to any third party intellectual property right. TI disclaims responsibility for, and you will fully indemnify TI and its representatives against, any claims, damages, costs, losses, and liabilities arising out of your use of these resources.

TI’s products are provided subject to TI’s Terms of Sale (www.ti.com/legal/termsofsale.html) or other applicable terms available either on ti.com or provided in conjunction with such TI products. TI’s provision of these resources does not expand or otherwise alter TI’s applicable warranties or warranty disclaimers for TI products.

Mailing Address: Texas Instruments, Post Office Box 655303, Dallas, Texas 75265
Copyright © 2019, Texas Instruments Incorporated